BROOKFIELD PROPERTIES - MARKETING CENTER
660 5TH AVE, 12TH FLOOR, NEW YORK, NY10022
083-21

CS-00	COVER SHEET
FS-00	FINISH SCHEDULE
KP-01	FLOOR PLAN
KP-02	FLOOR PLAN
01-01	MARKETING CENTER 1204
02-01	COATS 1207
03-01	CUSTOM MILLWORK SHELVING
04-01	MODEL DISPLAY STAND
05-01	ELEVATOR LOBBY 1201
06-01	DOORS
07-01	BASE PLAN
08-01	WOOD TRIM

NO:	REVISIONS:	NAME:	DATE:
1	SUBMISSION FOR APPROVAL	N.P.	05/28/2021

SAMPLE PROJECT

Finepoint
Accelerating Excellence

DATE : 05/28/2021

DRAWN BY : N.P.

ARCHITECT :
GENSLER ARCHITECT
1700 BROADWAY, NEW YORK 10001

CONTRACTOR :

DRAWING TITLE :
COVER SHEET

ROOM OR SPACE : FLOOR : 12/14th

PROJECT NUMBER: 083-21

DRAWING NUMBER:
CS-00

083-21R2 | BROOKFIELD
660 5TH AVENUE, NY

PROJECT MATERIAL LOG

TAG	MATERIAL	MANUFACTURER	LOCATION	PRODUCT NAME & NUMBER	COLOR/SIZE/FINISH	REV.	DATE SUBTD.	DATE RESPONSE	STATUS		Remark	LEAD TIME
									APPROVED	NOT APPROVED		
WD01	WOOD	Millwork	Marketing Center 1204, Coats	Wood Veneer Stain & Ceruse Rift White Oak								
WD02	WOOD	Millwork	Elevator Lobby 1201	Painted Wood	Sheen 90%							
WD03	WOOD	Millwork	Marketing Center 1204	Painted Wood	Matte							
PL01	Plastic laminate	Millwork	Coats 1207	TBD	TBD							

NO:	REVISIONS:	NAME:	DATE:
1	SUBMISSION FOR APPROVAL	N.P.	05/28/2021

SAMPLE PROJECT

Fingerpoint
Accelerating Excellence

DATE : 05/28/2021

DRAWN BY : N.P.

ARCHITECT :
GENSLER ARCHITECT
1700 BROADWAY, NEW YORK 10001

CONTRACTOR :

DRAWING TITLE :
FINISH SCHEDULE

ROOM OR SPACE : FLOOR : 12/14th

PROJECT NUMBER: 083-21

DRAWING NUMBER: FS-00

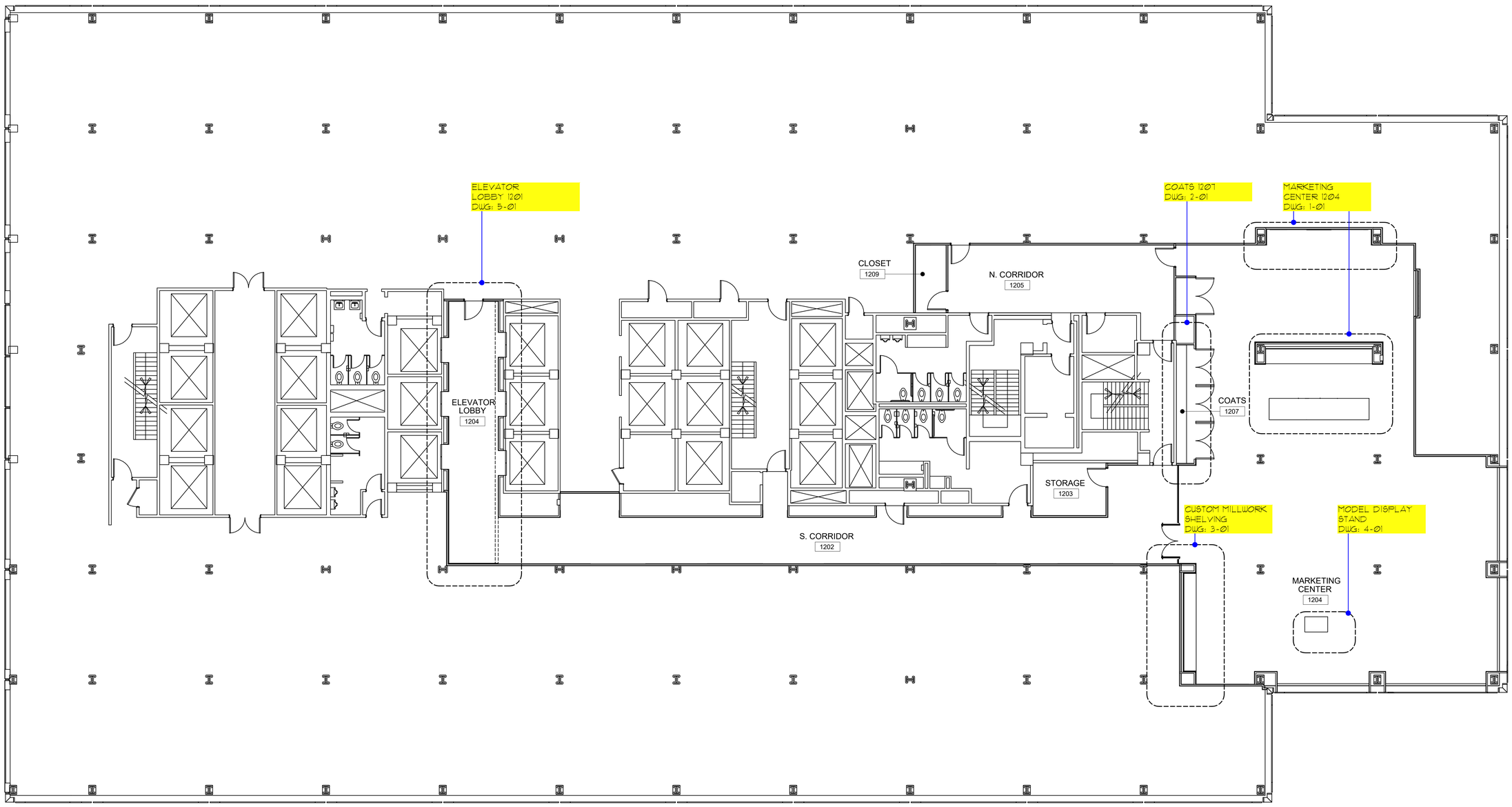

1 FLOOR PLAN - FLOOR 12

Scale: 3"=1'-0"

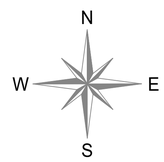

NO:	REVISIONS:	NAME:	DATE:
1	SUBMISSION FOR APPROVAL	N.P.	05/28/2021

SAMPLE PROJECT

Finepoint
Accelerating Excellence

DATE : 05/28/2021

DRAWN BY : N.P.

ARCHITECT : GENSLER ARCHITECT
1700 BROADWAY, NEW YORK 10001

CONTRACTOR :

DRAWING TITLE : KEY PLAN

ROOM OR SPACE : FLOOR : 12th

PROJECT NUMBER: 083-21

DRAWING NUMBER: KP-01

1 OF 2

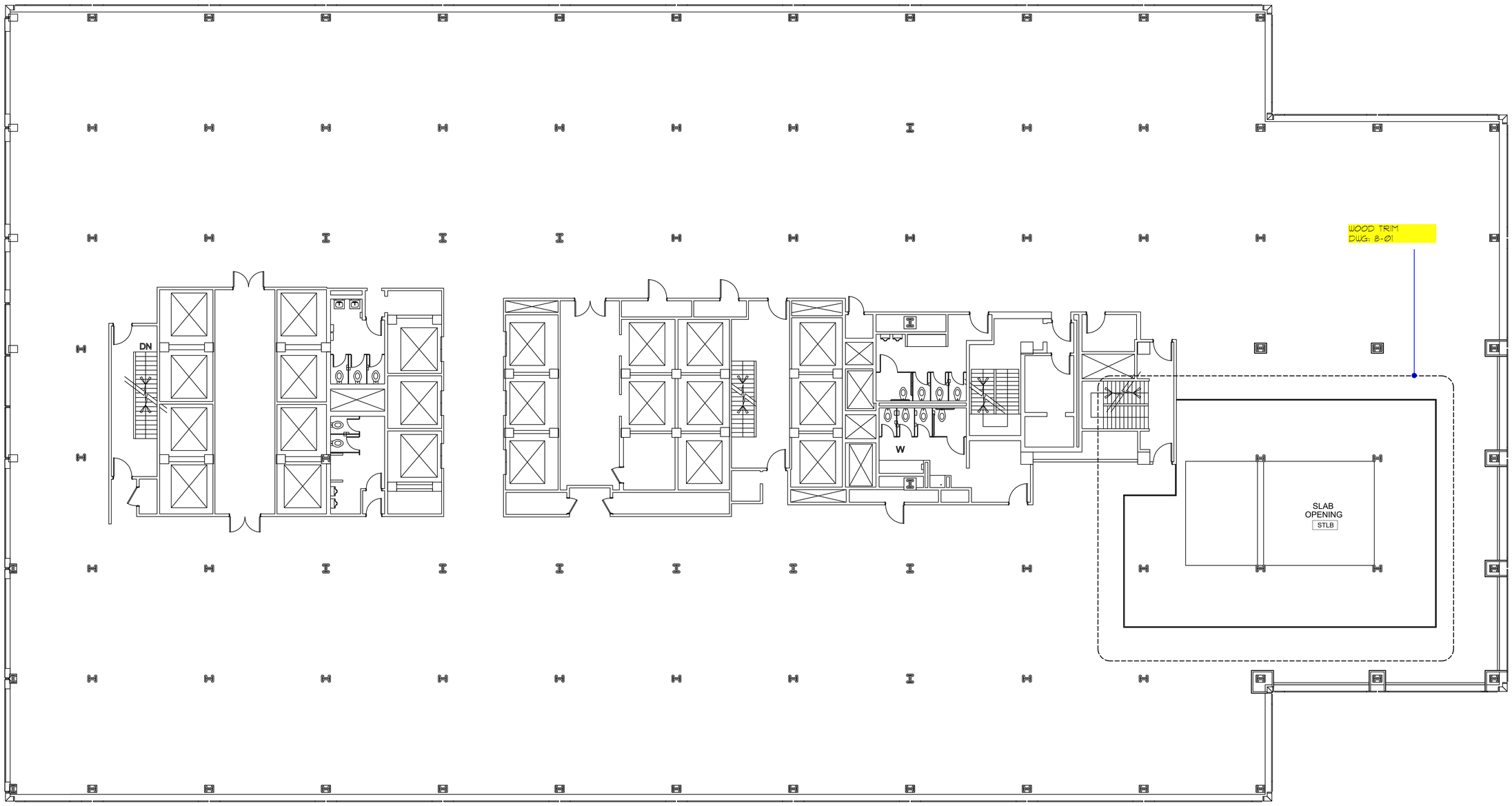

2 FLOOR PLAN - FLOOR 13

Scale: 3"=1'-0"

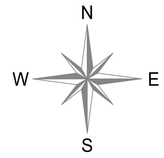

NO:	REVISIONS:	NAME:	DATE:
1	SUBMISSION FOR APPROVAL	N.P.	05/28/2021

SAMPLE PROJECT

Fingerpoint
Accelerating Excellence

DATE : 05/28/2021

DRAWN BY : N.P.

ARCHITECT : GENSLER ARCHITECT
1700 BROADWAY, NEW YORK 10001

CONTRACTOR :

DRAWING TITLE : KEY PLAN

ROOM OR SPACE : FLOOR : 13th

PROJECT NUMBER: 083-21

DRAWING NUMBER: KP-02

2 OF 2

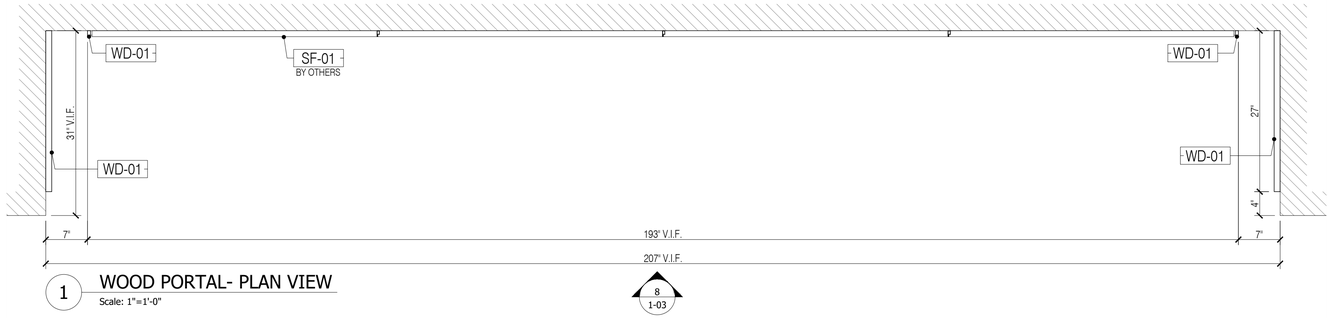

1 WOOD PORTAL- PLAN VIEW

Scale: 1"=1'-0"

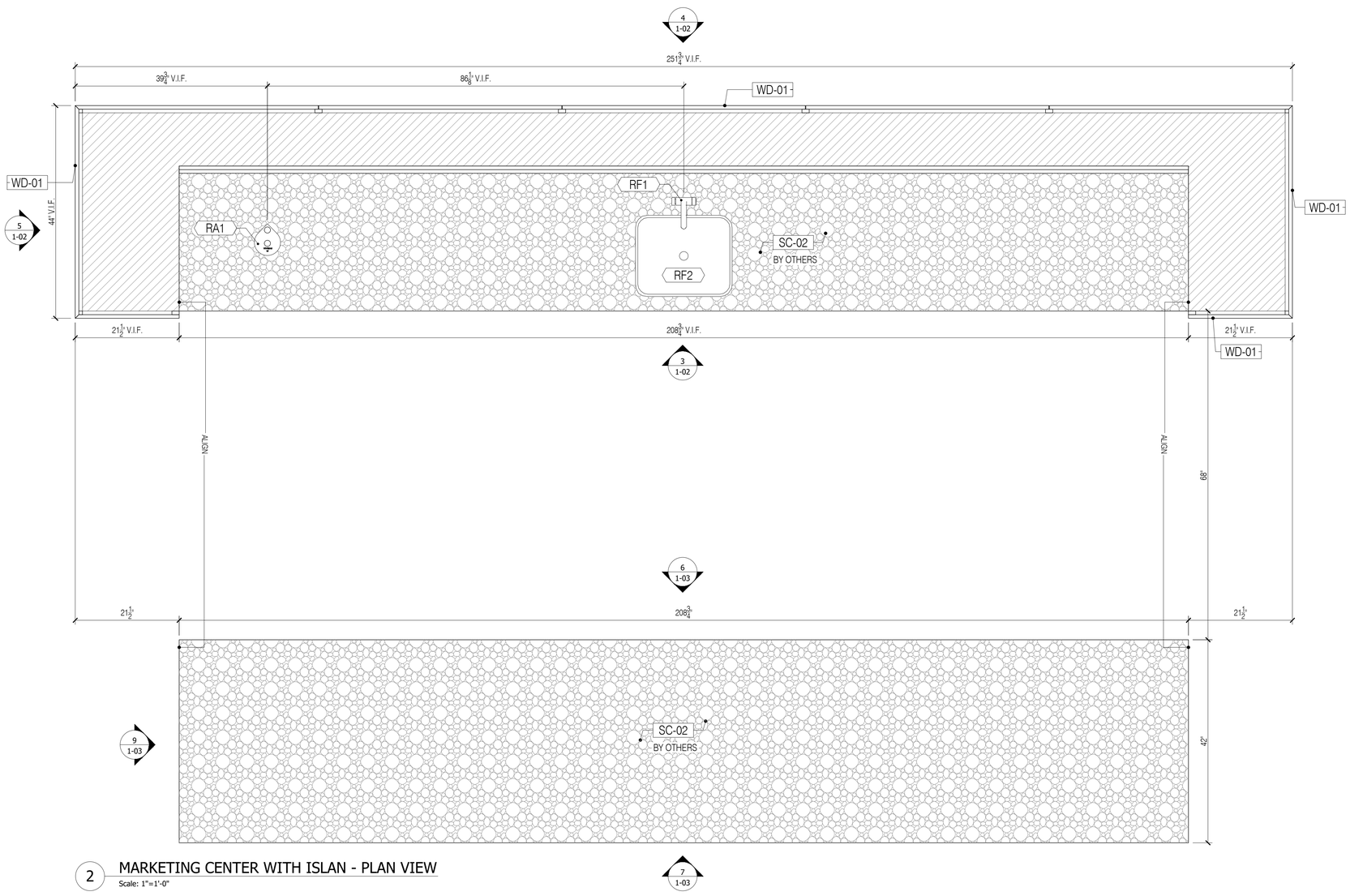

2 MARKETING CENTER WITH ISLAN - PLAN VIEW

Scale: 1"=1'-0"

GENERAL NOTES

1. SEE ARCHITECTURAL DWG FOR FINISH SCHEDULE
2. ALL DIMENSIONS ARE VERIFY IN THE FIELD

- GC TO COORDINATE EXACT LOCATION OF OUTLET WITH MILLWORK
- GC TO PROVIDE ALL NECESSARY BLOCKING AS REQUIRED

QUANTITY

ITEM #	FLOOR	DESCRIPTION	QTY	SUB TOTAL
1.	12TH	MARKETING CENTER	1 EA.	
2.	12TH	MARKETING CENTER ISLAND	1 EA.	
2.	12TH	WOOD PORTAL	1 EA.	
TOTAL			3 EA.	

REFERENCE DWG :

1. A-800, A-961
2. DESIGN OVERVIEW - MARCH 9, 2021

APPLIANCE SCHEDULE

RA1	- SINGLE SERVE DISPENSER/ VI 2
RA2	- DISHWASHER / ASKO/40 SERIES DFI664
RA4	- REFRIGERATOR/ SUMMIT/ FF7LBLXBIFADA

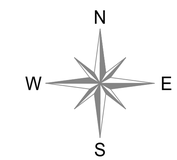

NO:	REVISIONS:	NAME:	DATE:
1	SUBMISSION FOR APPROVAL	D.V.	05/28/2021
2	REVISED AS PER COMMENTS	D.V.	06/10/2021

SAMPLE PROJECT

Finepoint
Accelerating Excellence

DATE : 05/28/2021

DRAWN BY : D.V.

ARCHITECT :
GENSLER ARCHITECT
1700 BROADWAY, NEW YORK 10001

CONTRACTOR :

DRAWING TITLE :
MARKETING CENTER PLAN

ROOM OR SPACE : 1204
FLOOR : 12th

PROJECT NUMBER: 083-21R2

DRAWING NUMBER: 1-01

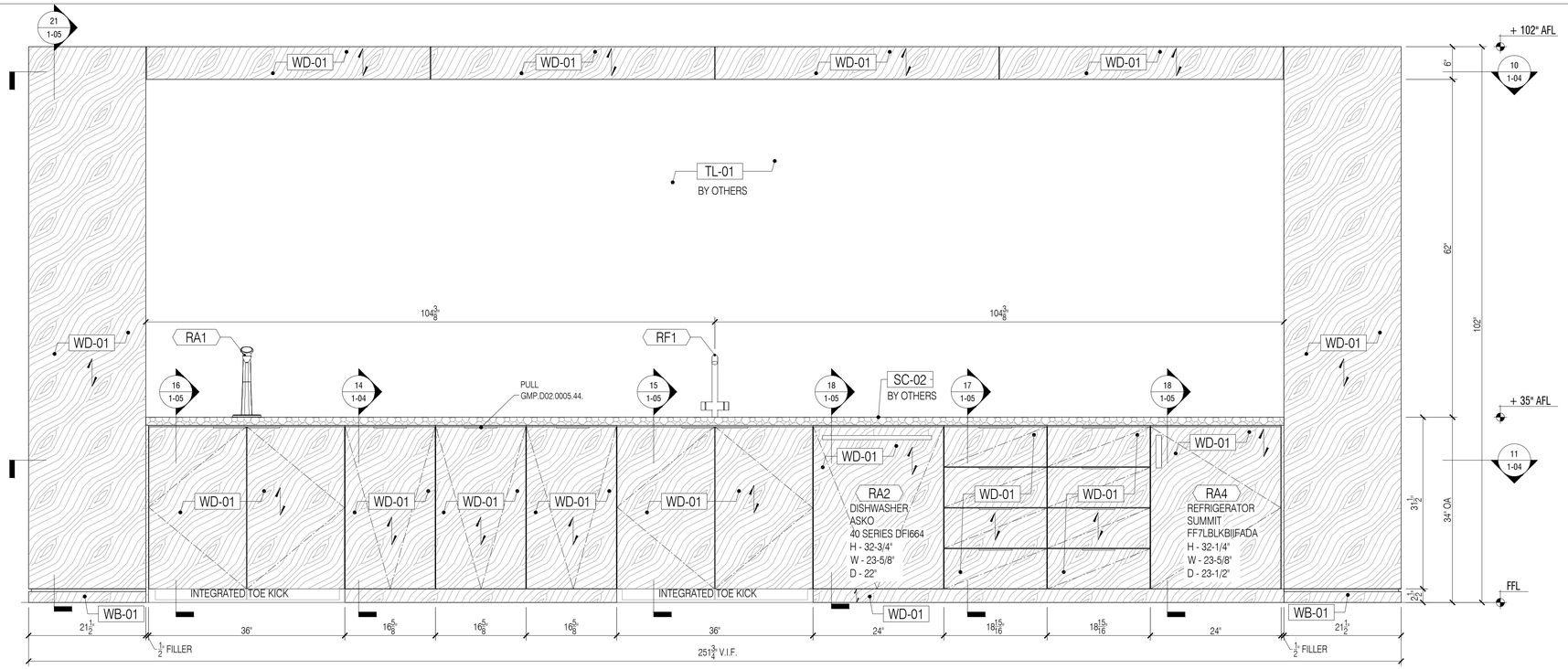

3 MARKETING CENTER - ELEVATION
Scale: 1"=1'-0"

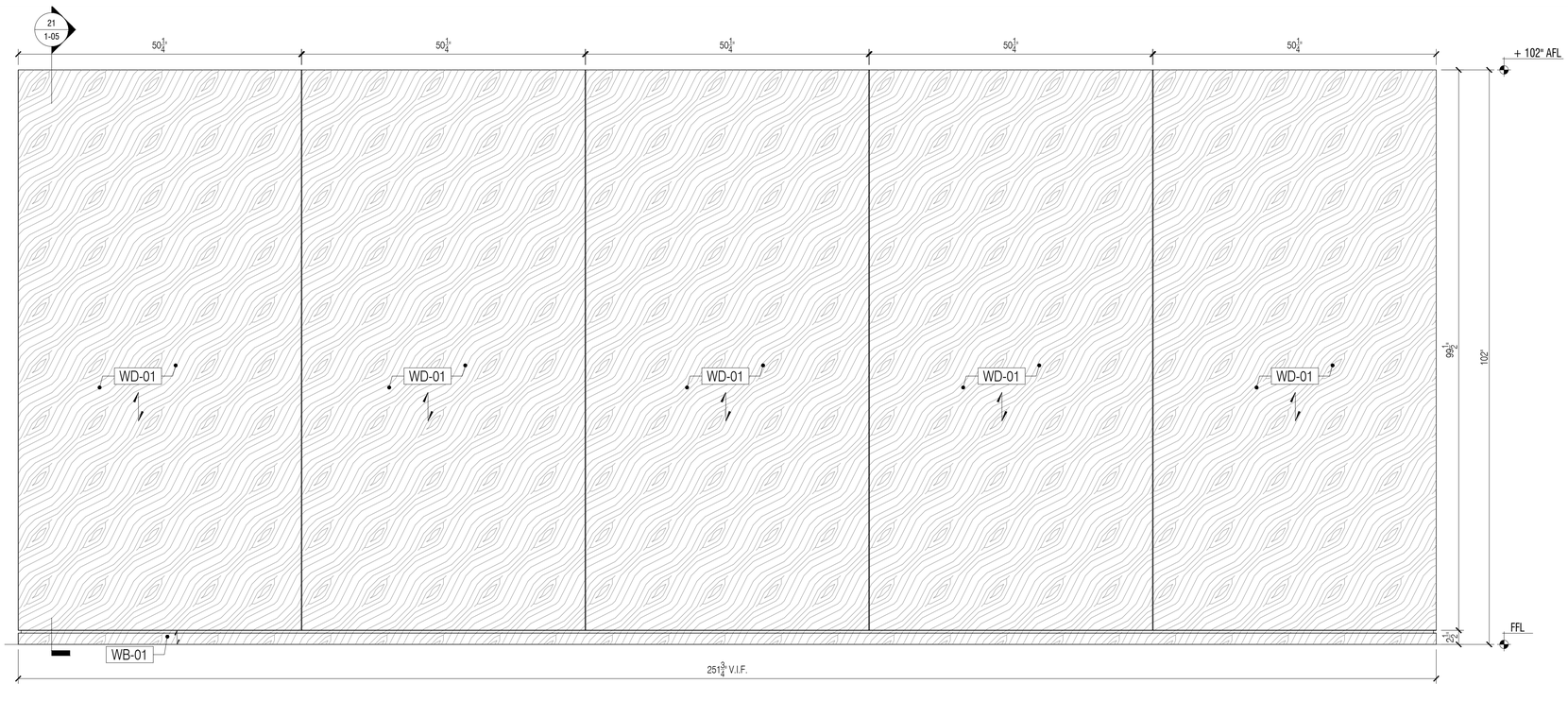

4 MARKETING CENTER - ELEVATION
Scale: 1"=1'-0"

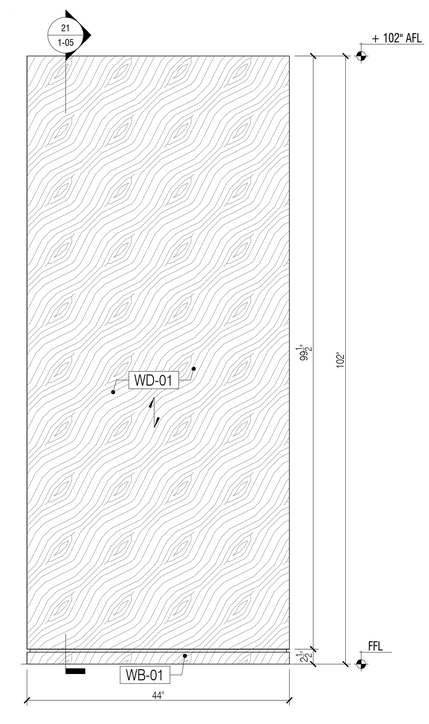

5 MARKETING CENTER - ELEVATION
Scale: 1"=1'-0"

GENERAL NOTES

1. SEE ARCHITECTURAL DWG FOR FINISH SCHEDULE
2. ALL DIMENSIONS ARE VERIFY IN THE FIELD

- GC TO COORDINATE EXACT LOCATION OF OUTLET WITH MILLWORK
- GC TO PROVIDE ALL NECESSARY BLOCKING AS REQUIRED

QUANTITY

ITEM #	FLOOR	DESCRIPTION	QTY	SUB TOTAL
1.	12TH	MARKETING CENTER	1 EA.	
2.	12TH	MARKETING CENTER ISLAND	1 EA.	
2.	12TH	WOOD PORTAL	1 EA.	
TOTAL			3 EA.	

REFERENCE DWG :

1. A-800, A-961
2. DESIGN OVERVIEW - MARCH 9, 2021

APPLIANCE SCHEDULE

RA1 - SINGLE SERVE DISPENSER/ VI 2
RA2 - DISHWASHER / ASKO/40 SERIES DFI664
RA4 - REFRIGERATOR/ SUMMIT/ FF7LBLKBIIFADA

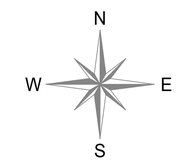

NO:	REVISIONS:	NAME:	DATE:
1	SUBMISSION FOR APPROVAL	D.V.	05/28/2021
2	REVISED AS PER COMMENTS	D.V.	06/10/2021

SAMPLE PROJECT

Finepoint
Accelerating Excellence

DATE : 05/28/2021

DRAWN BY : D.V.

ARCHITECT :
GENSLER ARCHITECT
1700 BROADWAY, NEW YORK 10001

CONTRACTOR :

DRAWING TITLE :
MARKETING CENTER ELEVATION

ROOM OR SPACE : 1204
FLOOR : 12th

PROJECT NUMBER: 083-21R2

DRAWING NUMBER: 1-02

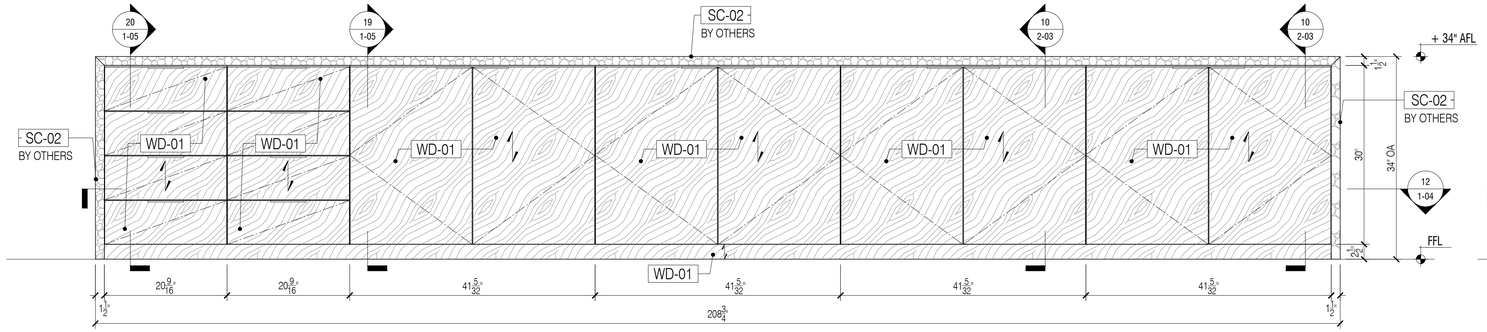

6 MARKETING CENTER ISLAN - ELEVATION

Scale: 1"=1'-0"

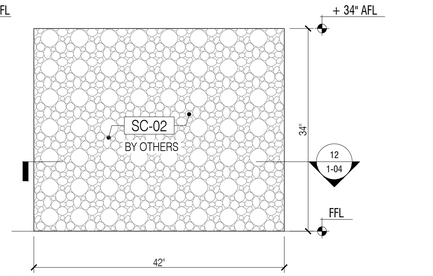

9 MARKETING CENTER ISLAN - ELEVATION

Scale: 1"=1'-0"

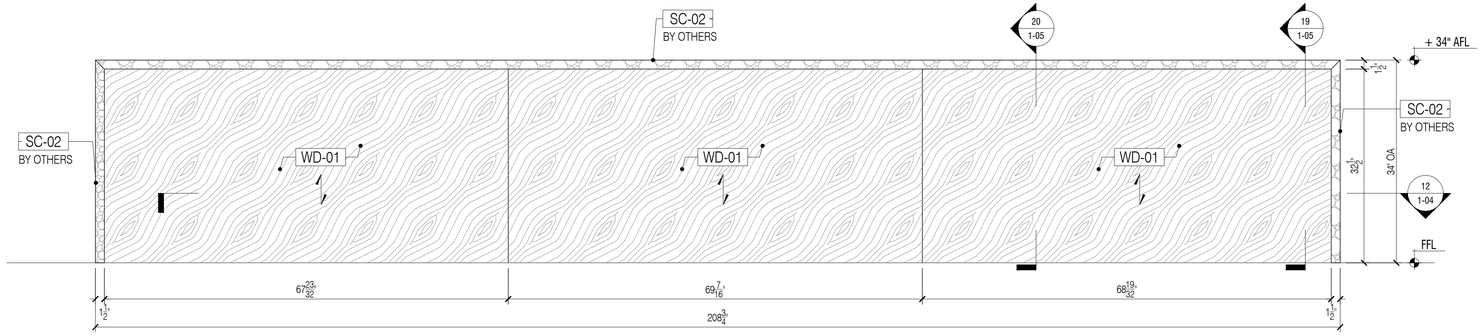

7 MARKETING CENTER ISLAN - ELEVATION

Scale: 1"=1'-0"

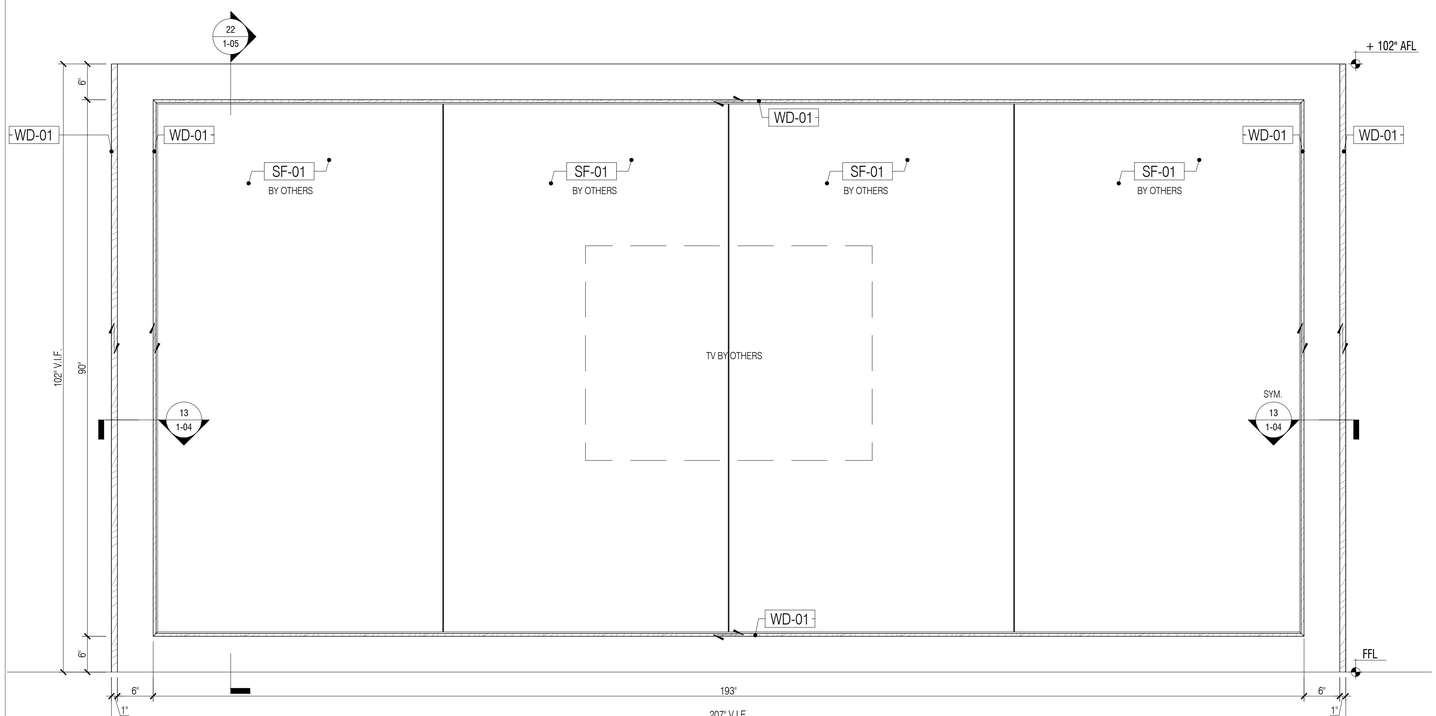

8 WOOD PORTAL - ELEVATION

Scale: 1"=1'-0"

GENERAL NOTES

1. SEE ARCHITECTURAL DWG FOR FINISH SCHEDULE
2. ALL DIMENSIONS ARE VERIFY IN THE FIELD

- GC TO COORDINATE EXACT LOCATION OF OUTLET WITH MILLWORK
- GC TO PROVIDE ALL NECESSARY BLOCKING AS REQUIRED

QUANTITY

ITEM #	FLOOR	DESCRIPTION	QTY	SUB TOTAL
1.	12TH	MARKETING CENTER	1 EA.	
2.	12TH	MARKETING CENTER ISLAND	1 EA.	
2.	12TH	WOOD PORTAL	1 EA.	
TOTAL			3 EA.	

REFERENCE DWG :

1. A-800, A-961
2. DESIGN OVERVIEW - MARCH 9, 2021

APPLIANCE SCHEDULE

RA1 - SINGLE SERVE DISPENSER/ VI 2

RA2 - DISHWASHER / ASKO/40 SERES DFI664

RA4 - REFRIGERATOR/ SUMMIT/ FF7LBLKBIFADA

N
W E
S

NO:	REVISIONS:	NAME:	DATE:
1	SUBMISSION FOR APPROVAL	D.V.	05/28/2021
2	REVISED AS PER COMMENTS	D.V.	06/10/2021

SAMPLE PROJECT

Finepoint
Accelerating Excellence

DATE : 05/28/2021

DRAWN BY : D.V.

ARCHITECT :
GENSLER ARCHITECT
1700 BROADWAY, NEW YORK 10001

CONTRACTOR :

DRAWING TITLE :
MARKETING CENTER ELEVATION

ROOM OR SPACE : 1204
FLOOR : 12th

PROJECT NUMBER: 083-21R2

DRAWING NUMBER: 1-03

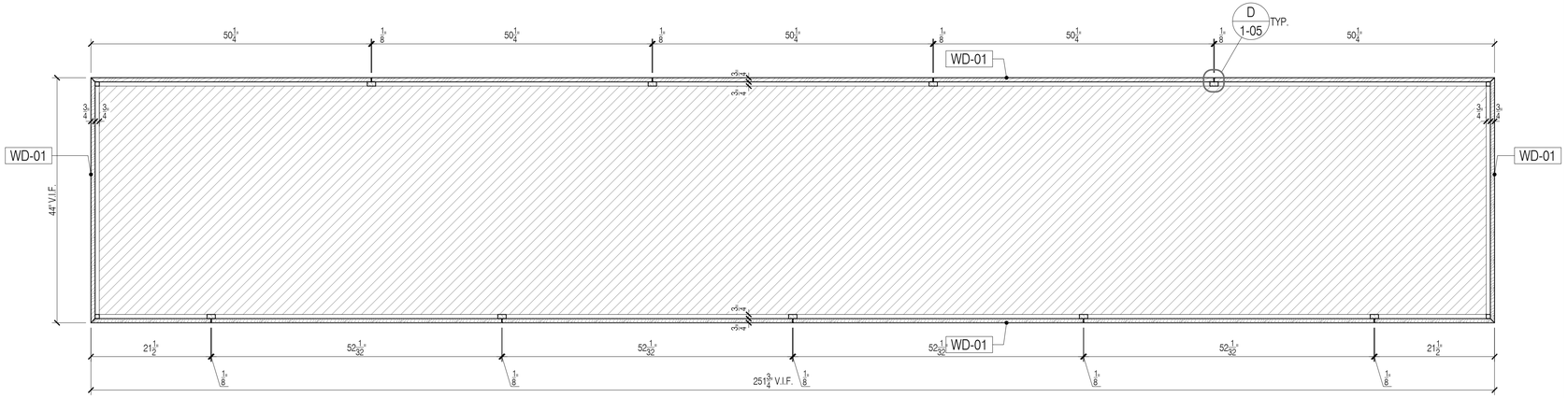

10 MARKETING CENTER - PLAN SECTION
Scale: 1"=1'-0"

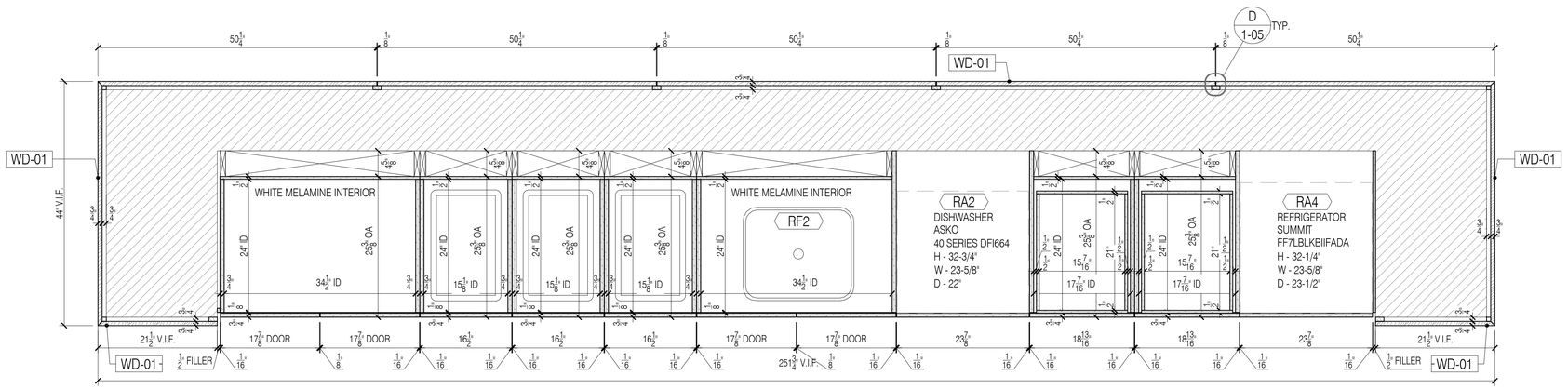

11 MARKETING CENTER - PLAN SECTION
Scale: 1"=1'-0"

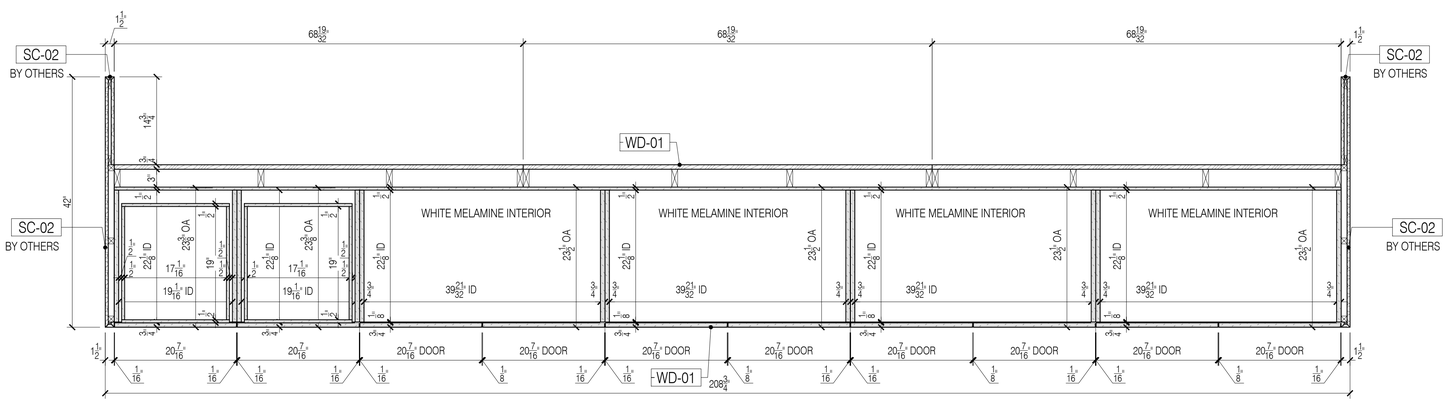

12 MARKETING CENTER ISLAN - PLAN SECTION
Scale: 1"=1'-0"

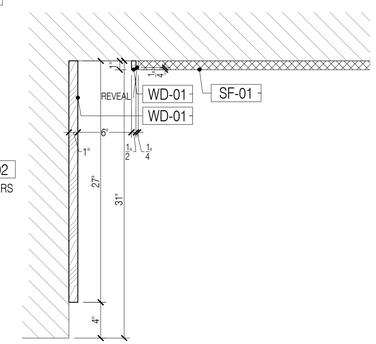

13 WOOD PORTAL - PLAN SECTION
Scale: 1"=1'-0"

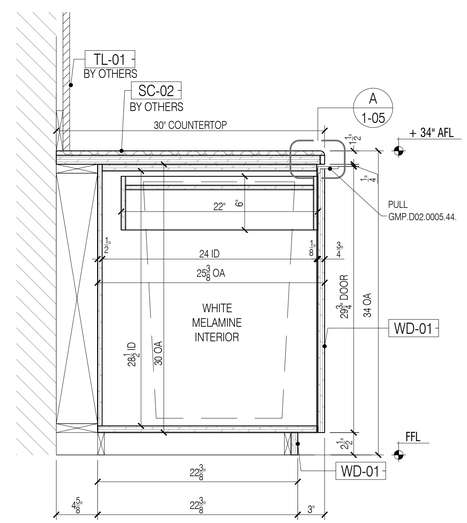

14 SECTION - MARKETING CENTER
Scale: 1-1/2"=1'-0"

GENERAL NOTES

1. SEE ARCHITECTURAL DWG FOR FINISH SCHEDULE
2. ALL DIMENSIONS ARE VERIFY IN THE FIELD

- GC TO COORDINATE EXACT LOCATION OF OUTLET WITH MILLWORK
- GC TO PROVIDE ALL NECESSARY BLOCKING AS REQUIRED

QUANTITY

ITEM #	FLOOR	DESCRIPTION	QTY	SUB TOTAL
1.	12TH	MARKETING CENTER	1 EA.	
2.	12TH	MARKETING CENTER ISLAND	1 EA.	
2.	12TH	WOOD PORTAL	1 EA.	
TOTAL			3 EA.	

REFERENCE DWG :

1. A-800, A-961
2. DESIGN OVERVIEW - MARCH 9, 2021

APPLIANCE SCHEDULE

RA1 - SINGLE SERVE DISPENSER/ VI 2
RA2 - DISHWASHER / ASKO/40 SERES DFI664
RA4 - REFRIGERATOR/ SUMMIT/ FF7LBLKBIIFADA

N
W E
S

NO:	REVISIONS:	NAME:	DATE:
1	SUBMISSION FOR APPROVAL	D.V.	05/28/2021
2	REVISED AS PER COMMENTS	D.V.	06/10/2021

SAMPLE PROJECT

Fingerprint
Accelerating Excellence

DATE : 05/28/2021

DRAWN BY : D.V.

ARCHITECT :
GENSLER ARCHITECT
1700 BROADWAY, NEW YORK 10001

CONTRACTOR :

DRAWING TITLE :
MARKETING CENTER
PLAN SECTION, SECTION

ROOM OR SPACE : 1204
FLOOR : 12th

PROJECT NUMBER: 083-21R2

DRAWING NUMBER: 1-04

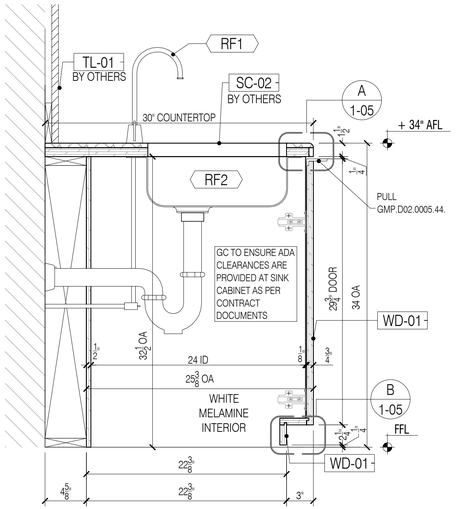

15 SECTION - MARKETING CENTER
Scale: 1-1/2"=1'-0"

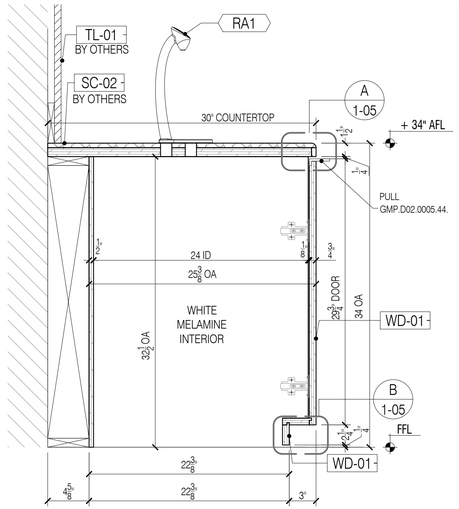

16 SECTION - MARKETING CENTER
Scale: 1-1/2"=1'-0"

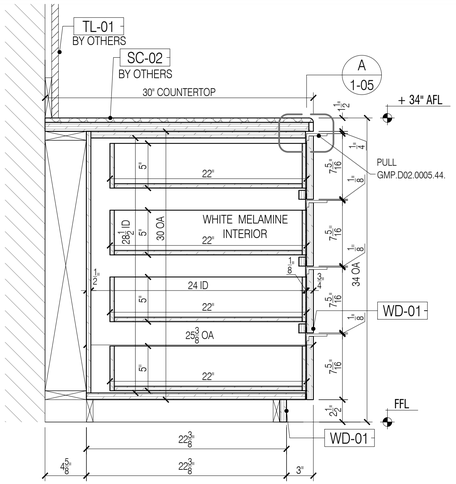

17 SECTION - MARKETING CENTER
Scale: 1-1/2"=1'-0"

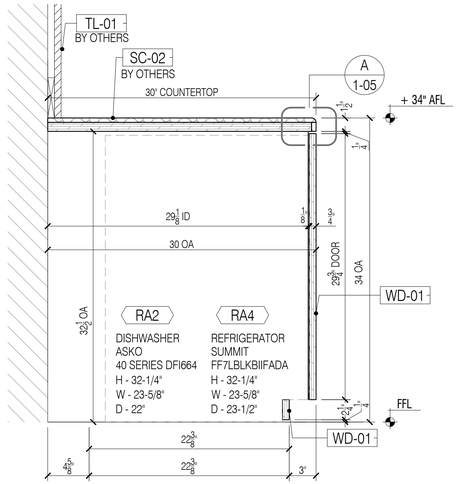

18 SECTION - MARKETING CENTER
Scale: 1-1/2"=1'-0"

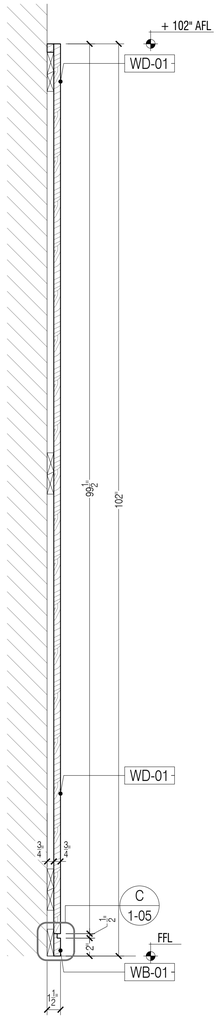

21 SECTION - MARKETING CENTER
Scale: 1-1/2"=1'-0"

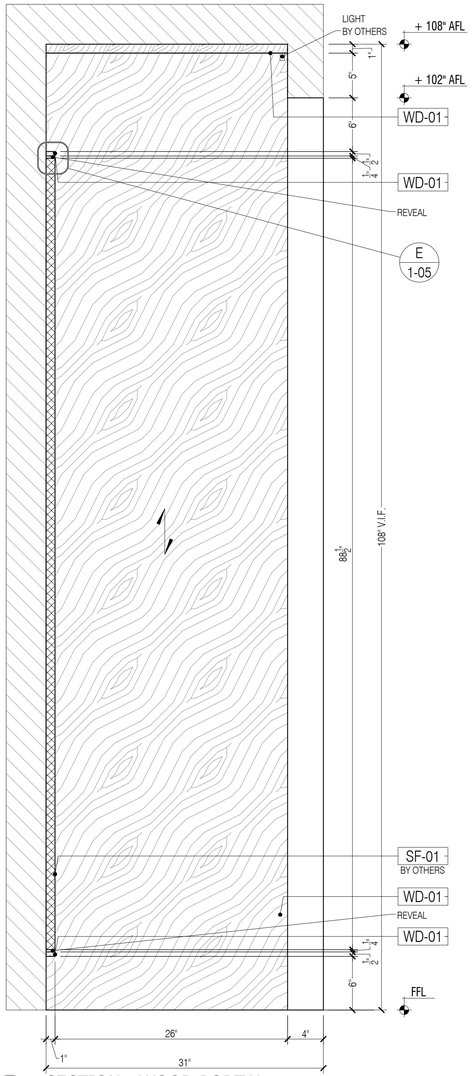

22 SECTION - WOOD PORTAL
Scale: 1-1/2"=1'-0"

GENERAL NOTES

1. SEE ARCHITECTURAL DWG FOR FINISH SCHEDULE
2. ALL DIMENSIONS ARE VERIFY IN THE FIELD

- GC TO COORDINATE EXACT LOCATION OF OUTLET WITH MILLWORK
- GC TO PROVIDE ALL NECESSARY BLOCKING AS REQUIRED

QUANTITY

ITEM #	FLOOR	DESCRIPTION	QTY	SUB TOTAL
1.	12TH	MARKETING CENTER	1 EA.	
2.	12TH	MARKETING CENTER ISLAND	1 EA.	
2.	12TH	WOOD PORTAL	1 EA.	
TOTAL			3 EA.	

REFERENCE DWG :

1. A-800, A-961
2. DESIGN OVERVIEW - MARCH 9, 2021

APPLIANCE SCHEDULE

RA1	- SINGLE SERVE DISPENSER/ VI 2
RA2	- DISHWASHER / ASKO/40 SERES DFI664
RA4	- REFRIGERATOR/ SUMMIT/ FF7LBLKBIIFADA

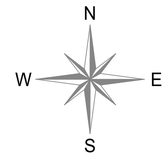

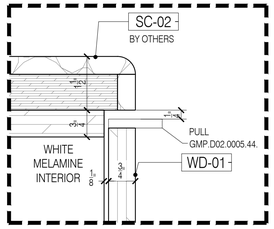

A MARKETING CENTER - DETAIL
Scale: 6"=1'-0"

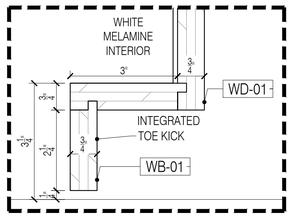

B MARKETING CENTER - DETAIL
Scale: 6"=1'-0"

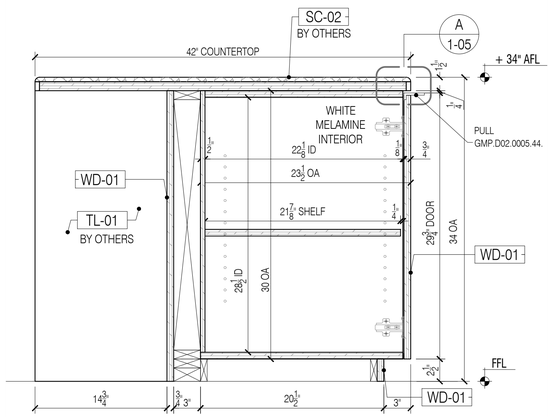

19 SECTION - MARKETING CENTER
Scale: 1-1/2"=1'-0"

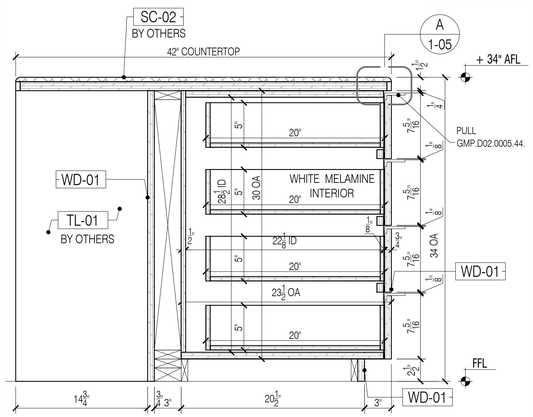

20 SECTION - MARKETING CENTER
Scale: 1-1/2"=1'-0"

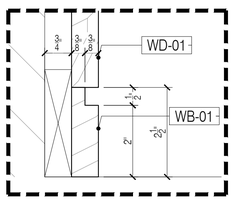

C MARKETING CENTER - DETAIL
Scale: 6"=1'-0"

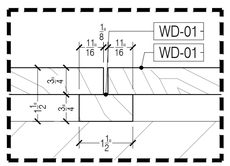

D MARKETING CENTER - DETAIL
Scale: 6"=1'-0"

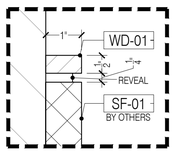

E MARKETING CENTER - DETAIL
Scale: 6"=1'-0"

NO:	REVISIONS:	NAME:	DATE:
1	SUBMISSION FOR APPROVAL	D.V.	05/28/2021
2	REVISED AS PER COMMENTS	D.V.	06/10/2021

SAMPLE PROJECT

Finepoint
Accelerating Excellence

DATE : 05/28/2021

DRAWN BY : D.V.

ARCHITECT :
GENSLER ARCHITECT
1700 BROADWAY, NEW YORK 10001

CONTRACTOR :

DRAWING TITLE :
MARKETING CENTER SECTION, DETAIL

ROOM OR SPACE : 1204
FLOOR : 12th

PROJECT NUMBER: 083-21R2

DRAWING NUMBER: 1-05

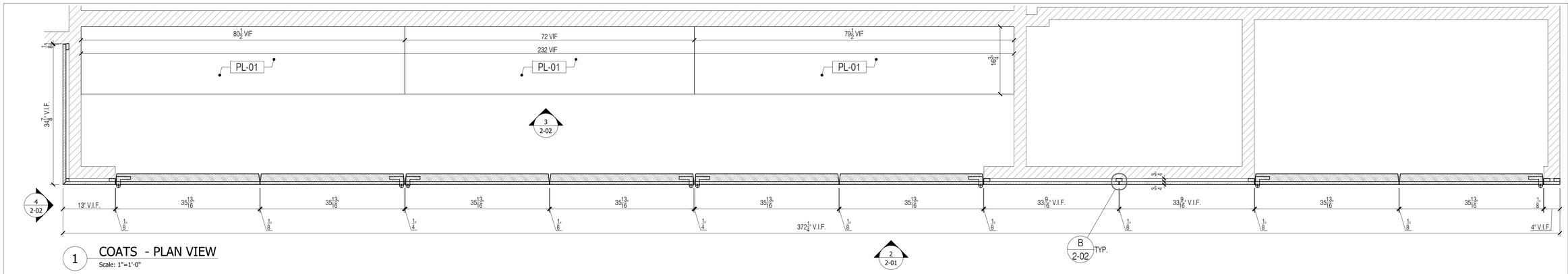

1 COATS - PLAN VIEW

Scale: 1"=1'-0"

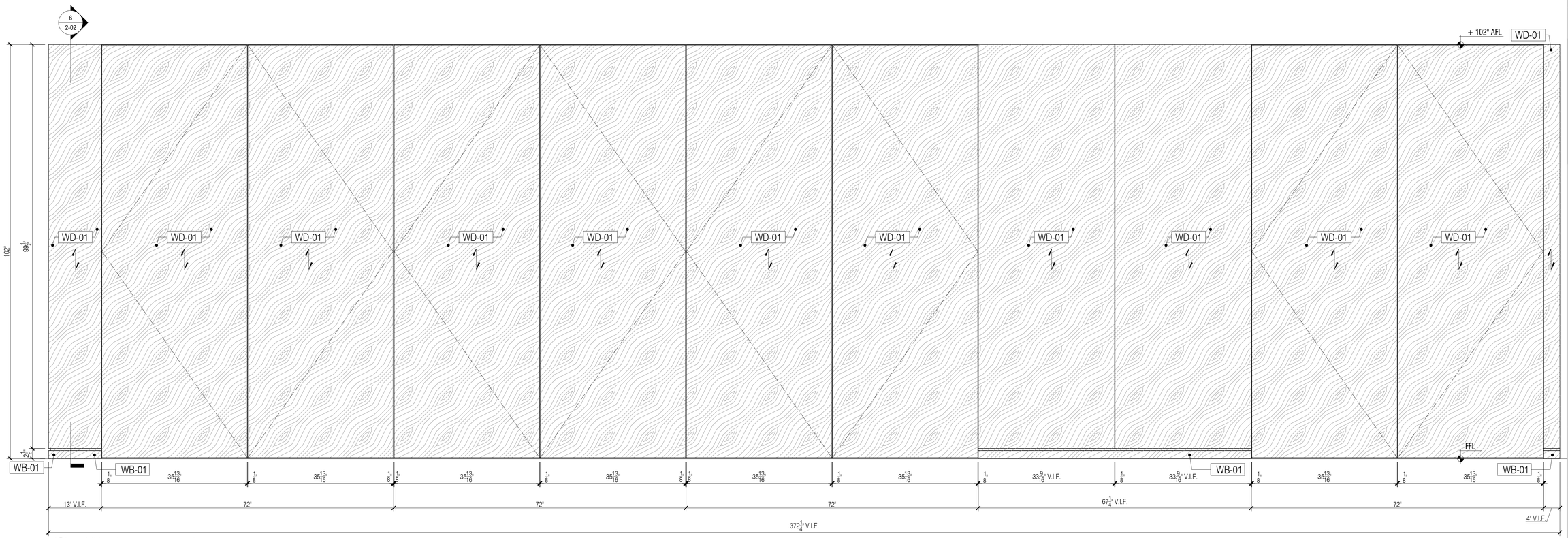

2 COATS - ELEVATION

Scale: 1"=1'-0"

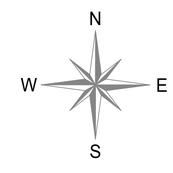

GENERAL NOTES

1. SEE ARCHITECTURAL DWG FOR FINISH SCHEDULE
2. ALL DIMENSIONS ARE VERIFY IN THE FIELD

- GC TO COORDINATE EXACT LOCATION OF OUTLET WITH MILLWORK
- GC TO PROVIDE ALL NECESSARY BLOCKING AS REQUIRED

QUANTITY

ITEM #	FLOOR	DESCRIPTION	QTY	SUB TOTAL
1.	12TH	COATS	3 EA.	
TOTAL			3 EA.	

REFERENCE DWG :

1. A-961
2. DESIGN OVERVIEW - MARCH 9, 2021

NO:	REVISIONS:	NAME:	DATE:
1	SUBMISSION FOR APPROVAL	D.V.	05/28/2021

SAMPLE PROJECT

Tingpoint
Accelerating Excellence

DATE : 05/28/2021

DRAWN BY : D.V.

ARCHITECT : GENSLER ARCHITECT
1700 BROADWAY, NEW YORK 10001

CONTRACTOR :

DRAWING TITLE : COATS
PLAN, ELEVATION, SECTION

ROOM OR SPACE : 1207
FLOOR : 12th

PROJECT NUMBER: 083-21R2

DRAWING NUMBER: 2-01

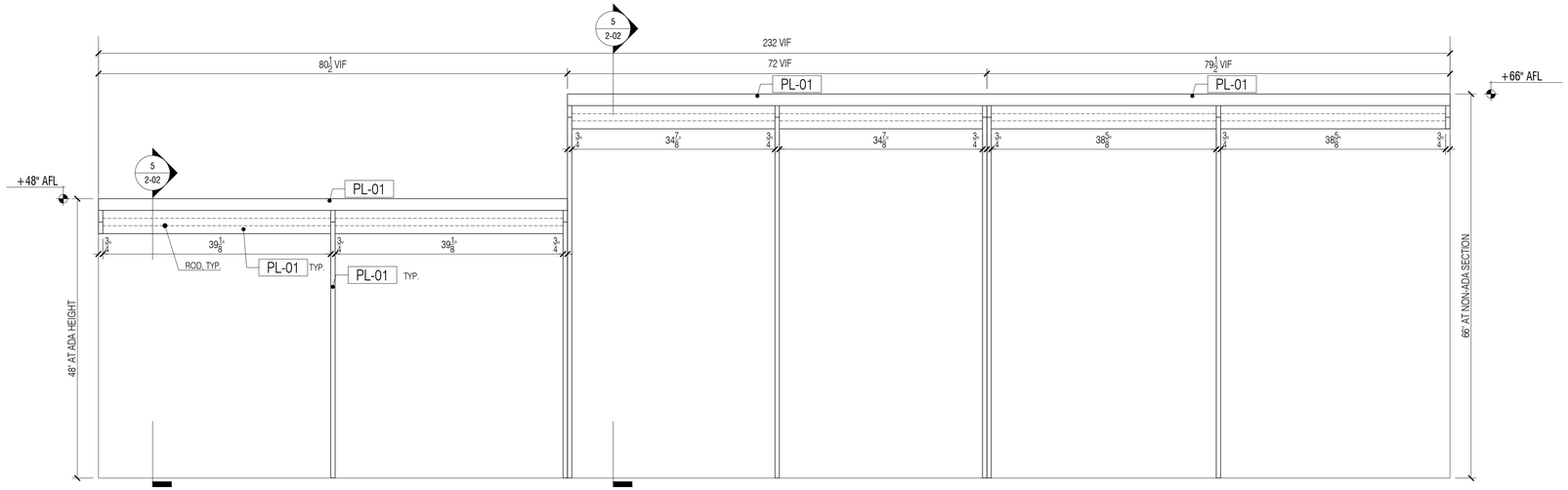

3 COATS - INTERIOR ELEVATION
Scale: 1"=1'-0"

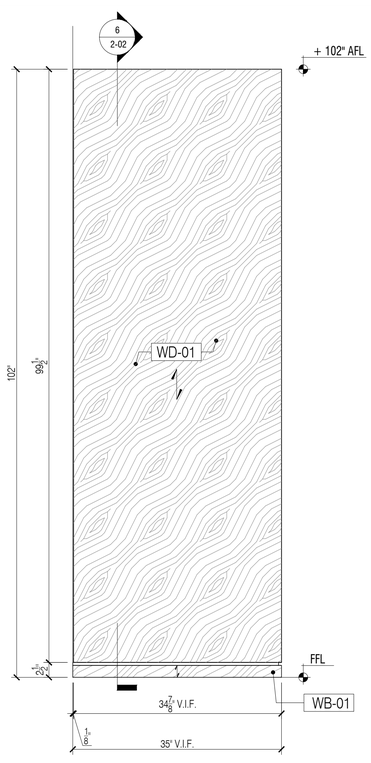

4 COATS - ELEVATION
Scale: 1"=1'-0"

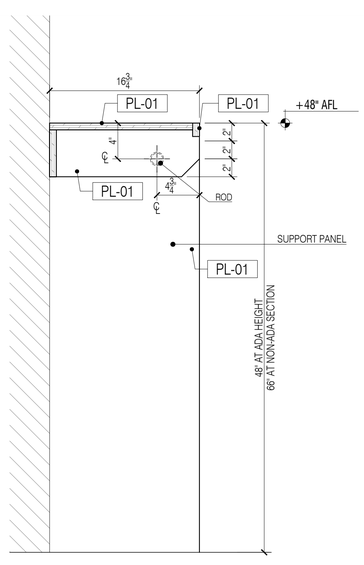

5 SECTION - COATS
Scale: 1-1/2"=1'-0"

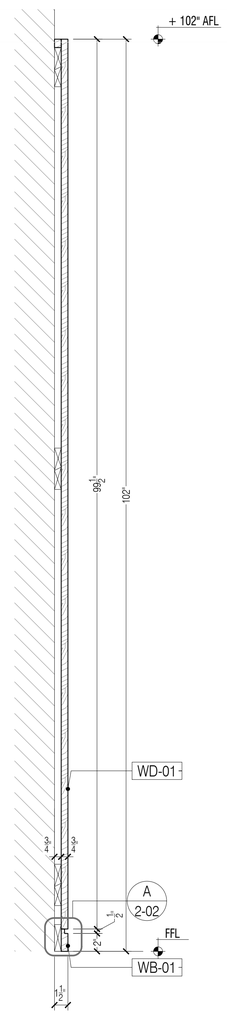

6 SECTION - COATS
Scale: 1-1/2"=1'-0"

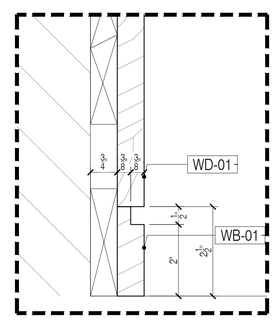

A COATS - DETAIL
Scale: 6"=1'-0"

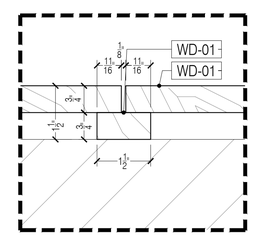

B COATS - DETAIL
Scale: 6"=1'-0"

GENERAL NOTES

1. SEE ARCHITECTURAL DWG FOR FINISH SCHEDULE
2. ALL DIMENSIONS ARE VERIFY IN THE FIELD

- GC TO COORDINATE EXACT LOCATION OF OUTLET WITH MILLWORK
- GC TO PROVIDE ALL NECESSARY BLOCKING AS REQUIRED

QUANTITY

ITEM #	FLOOR	DESCRIPTION	QTY	SUB TOTAL
1.	12TH	COATS	3 EA.	
TOTAL			3 EA.	

REFERENCE DWG :

1. A-961
2. DESIGN OVERVIEW - MARCH 9, 2021

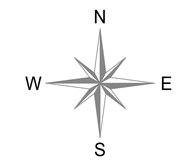

NO:	REVISIONS:	NAME:	DATE:
1	SUBMISSION FOR APPROVAL	D.V.	05/28/2021
2	REVISED AS PER COMMENTS	D.V.	06/10/2021

SAMPLE PROJECT

Fingerprint
Accelerating Excellence

DATE : 05/28/2021

DRAWN BY : D.V.

ARCHITECT :
GENSLER ARCHITECT
1700 BROADWAY, NEW YORK 10001

CONTRACTOR :

DRAWING TITLE :
COATS
PLAN, ELEVATION, SECTION

ROOM OR SPACE : 1207
FLOOR : 12th

PROJECT NUMBER: 083-21R2

DRAWING NUMBER: 2-02

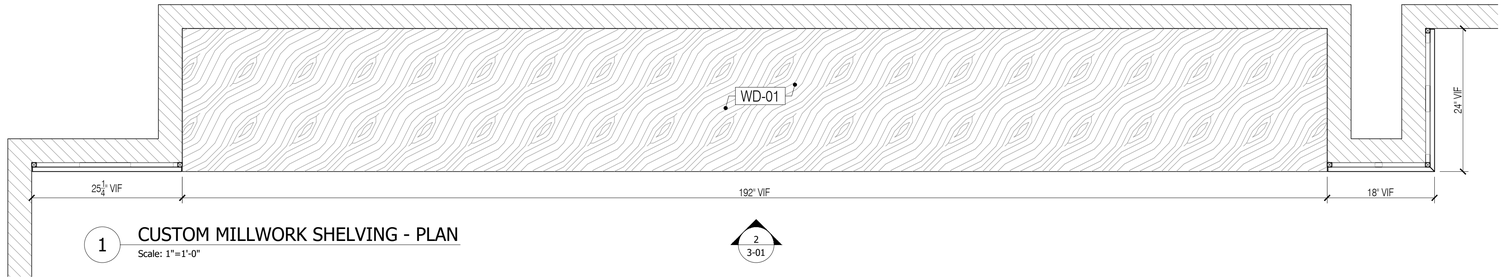

1 CUSTOM MILLWORK SHELVING - PLAN
Scale: 1"=1'-0"

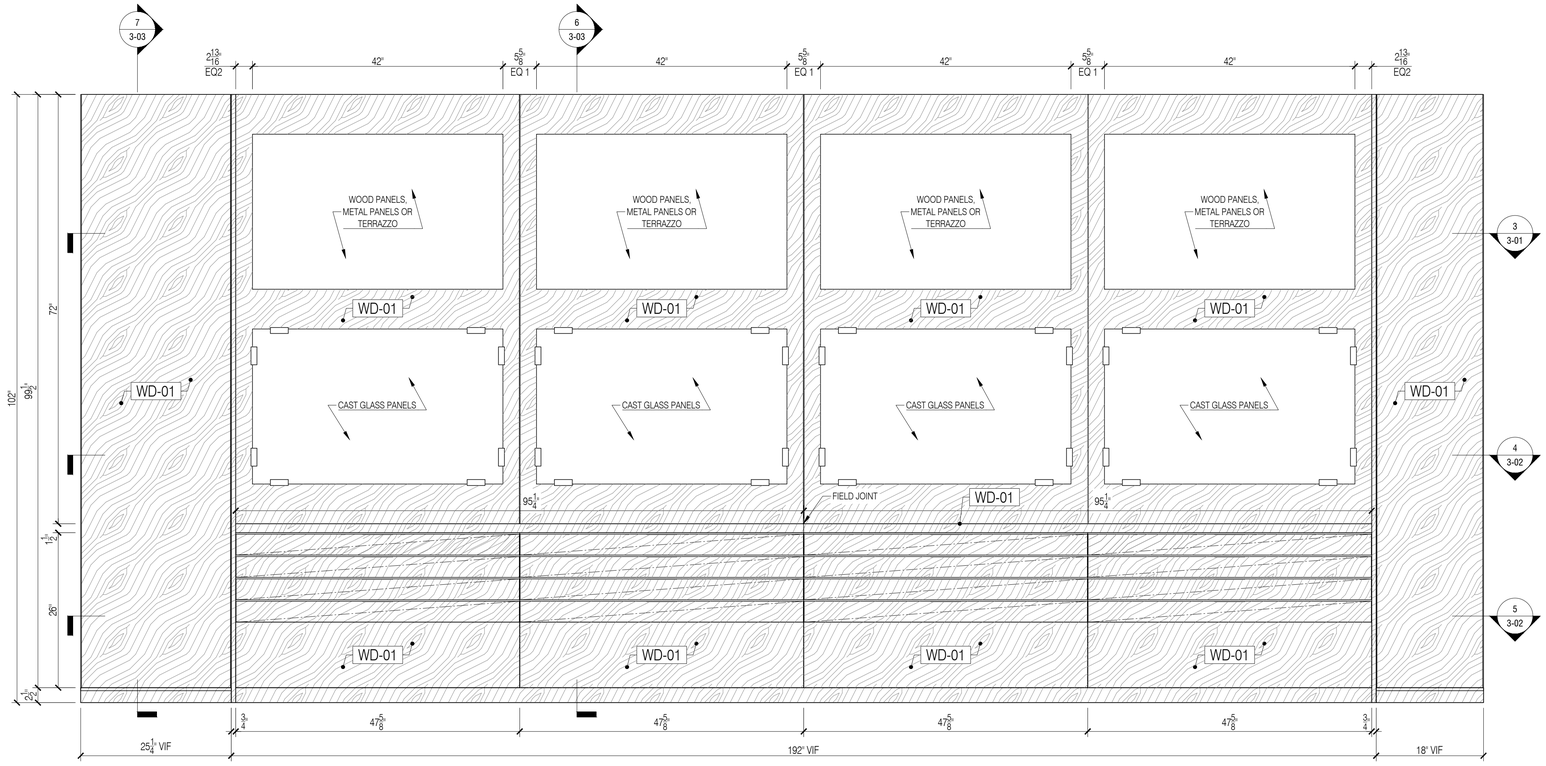

2 CUSTOM MILLWORK SHELVING - ELEVATION
Scale: 1"=1'-0"

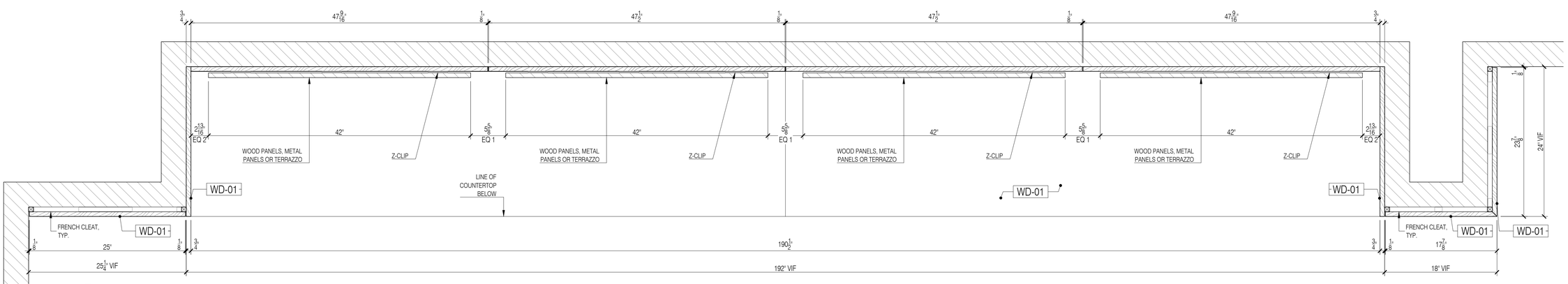

3 CUSTOM MILLWORK SHELVING - SECTION PLAN
Scale: 1-1/2"=1'-0"

GENERAL NOTES

1. SEE ARCHITECTURAL DWG FOR FINISH SCHEDULE
2. ALL DIMENSIONS ARE VERIFY IN THE FIELD

- GC TO COORDINATE EXACT LOCATION OF OUTLET WITH MILLWORK
- GC TO PROVIDE ALL NECESSARY BLOCKING AS REQUIRED

QUANTITY

ITEM #	FLOOR	DESCRIPTION	QTY	SUB TOTAL
1.	12th	MILLWORK SHELVING	1 EA.	
TOTAL			1 EA.	

REFERENCE DWG :

1. A-212.00
2. 16/A-800.00
3. 25/A-961.00, 19/A-961.00
4. ISSUE FOR CONSTRUCTION - 03/09/21

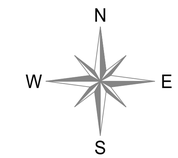

NO:	REVISIONS:	NAME:	DATE:
1	SUBMISSION FOR APPROVAL	G.K.	05/28/2021
2	REVISED AS PER COMMENTS	G.K.	07/21/2021

SAMPLE PROJECT

Finepoint
Accelerating Excellence

DATE : 05/28/2021

DRAWN BY : G.K.

ARCHITECT :
GENSLER ARCHITECT
1700 BROADWAY, NEW YORK 10001

CONTRACTOR :

DRAWING TITLE :
CUSTOM MILLWORK SHELVING PLAN, ELEVATION, SECTION

ROOM OR SPACE : FLOOR : 12th

PROJECT NUMBER: 083-21

DRAWING NUMBER: 3-01

GENERAL NOTES

1. SEE ARCHITECTURAL DWG FOR FINISH SCHEDULE
2. ALL DIMENSIONS ARE VERIFY IN THE FIELD

- GC TO COORDINATE EXACT LOCATION OF OUTLET WITH MILLWORK
- GC TO PROVIDE ALL NECESSARY BLOCKING AS REQUIRED

QUANTITY

ITEM #	FLOOR	DESCRIPTION	QTY	SUB TOTAL
1.	12th	MILLWORK SHELVING	1 EA.	
TOTAL			1 EA.	

REFERENCE DWG :

1. A-212.00
2. 16/A-800.00
3. 25/A-961.00, 19/A-961.00
4. ISSUE FOR CONSTRUCTION - 03/09/21

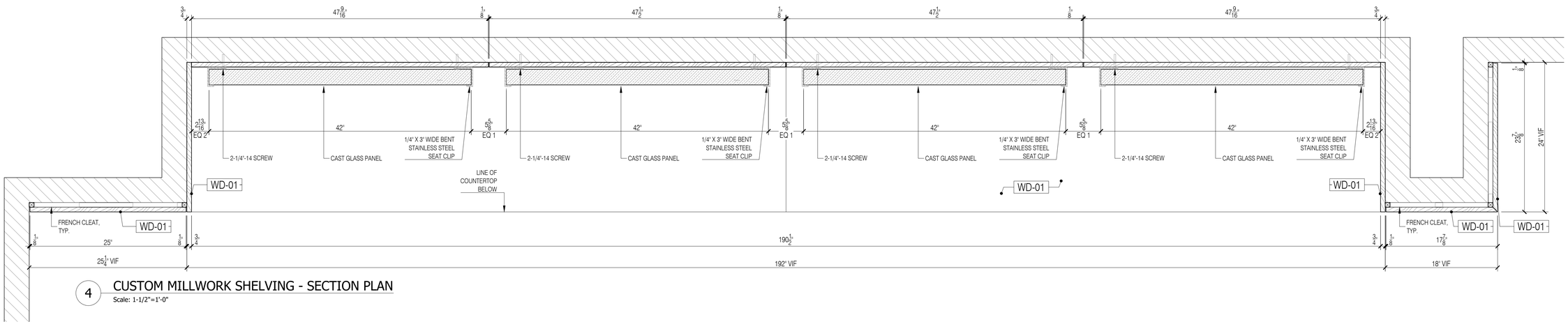

4 CUSTOM MILLWORK SHELVING - SECTION PLAN

Scale: 1-1/2"=1'-0"

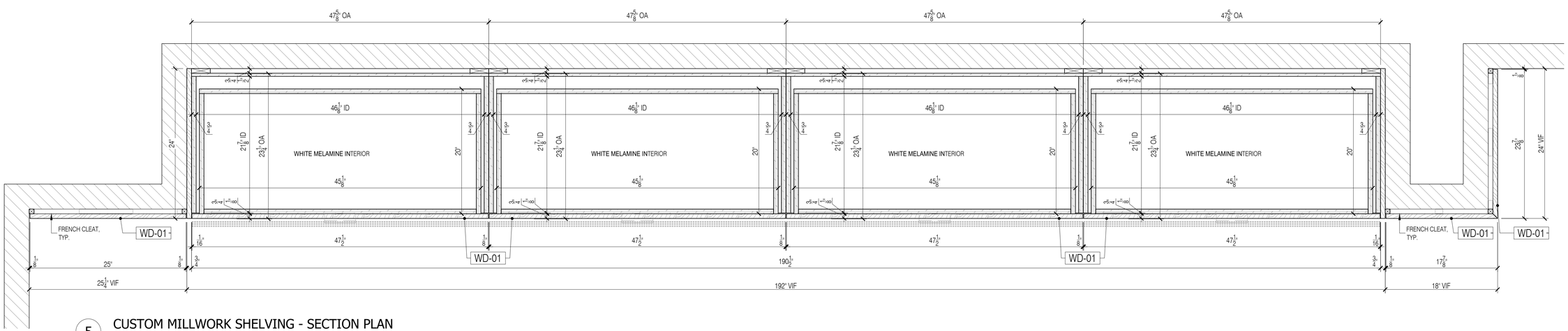

5 CUSTOM MILLWORK SHELVING - SECTION PLAN

Scale: 1-1/2"=1'-0"

NO:	REVISIONS:	NAME:	DATE:
1	SUBMISSION FOR APPROVAL	G.K.	05/28/2021
2	REVISED AS PER COMMENTS	G.K.	07/21/2021

SAMPLE PROJECT

Finepoint *Accelerating Excellence*

DATE : 05/28/2021

DRAWN BY : G.K.

ARCHITECT : GENSLER ARCHITECT
1700 BROADWAY, NEW YORK 10001

CONTRACTOR :

DRAWING TITLE : CUSTOM MILLWORK SHELVING SECTIONS

ROOM OR SPACE : FLOOR : 12th

PROJECT NUMBER: 083-21

DRAWING NUMBER: 3-02

GENERAL NOTES

1. SEE ARCHITECTURAL DWG FOR FINISH SCHEDULE
2. ALL DIMENSIONS ARE VERIFY IN THE FIELD

- GC TO COORDINATE EXACT LOCATION OF OUTLET WITH MILLWORK
- GC TO PROVIDE ALL NECESSARY BLOCKING AS REQUIRED

QUANTITY

ITEM #	FLOOR	DESCRIPTION	QTY	SUB TOTAL
1.	12th	MILLWORK SHELVING	1 EA.	
TOTAL			1 EA.	

REFERENCE DWG :

1. A-212.00
2. 16/A-800.00
3. 25/A-961.00, 19/A-961.00
4. ISSUE FOR CONSTRUCTION - 03/09/21

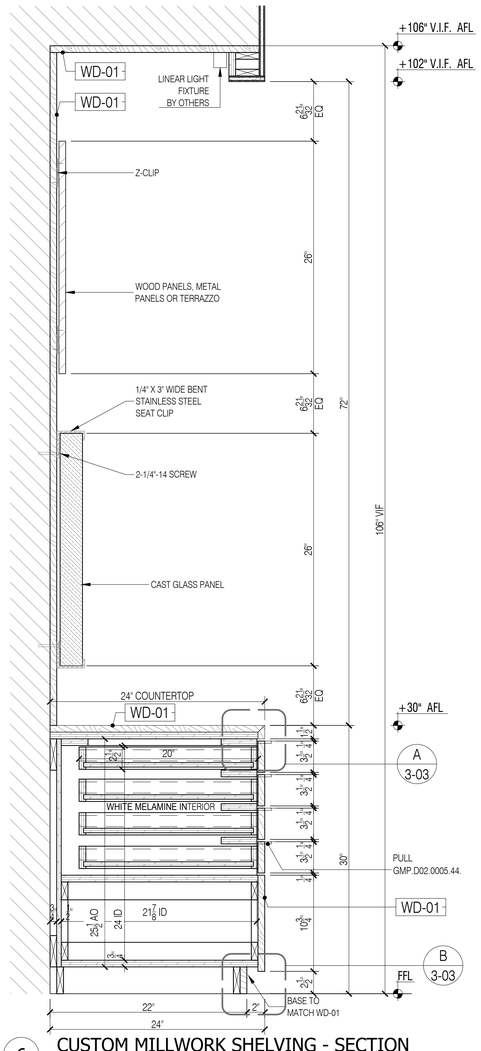

6 CUSTOM MILLWORK SHELVING - SECTION
Scale: 1-1/2"=1'-0"

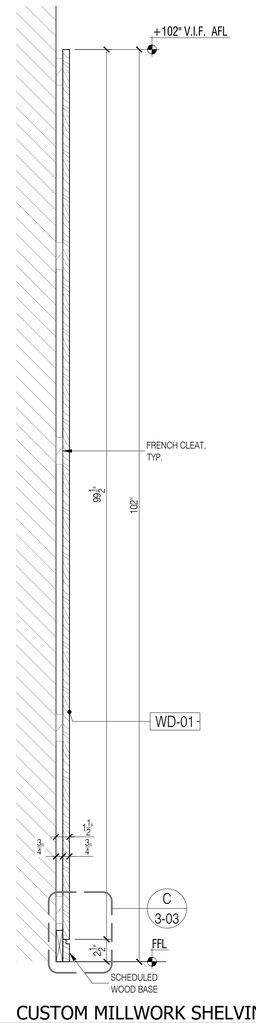

7 CUSTOM MILLWORK SHELVING - SECTION
Scale: 1-1/2"=1'-0"

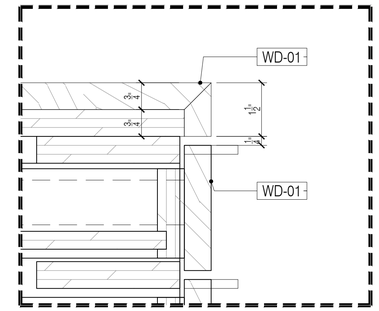

B SHELVING DETAIL - COUNTERTOP
Scale: 6"=1'-0"

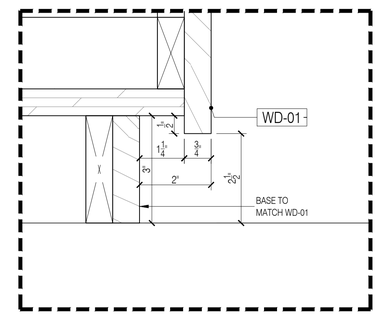

B SHELVING DETAIL - BASE
Scale: 6"=1'-0"

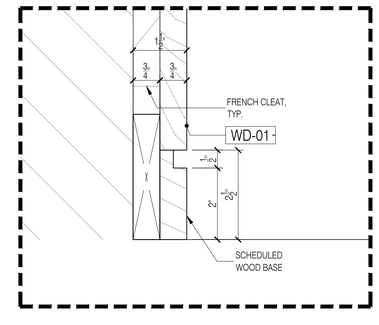

C WALL TRIM DETAIL - BASE
Scale: 6"=1'-0"

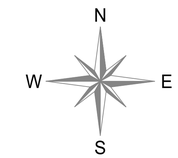

NO:	REVISIONS:	NAME:	DATE:
1	SUBMISSION FOR APPROVAL	G.K.	05/28/2021
2	REVISED AS PER COMMENTS	G.K.	07/21/2021

SAMPLE PROJECT

Fingerpoint Accelerating Excellence

DATE : 05/28/2021

DRAWN BY : G.K.

ARCHITECT : GENSLER ARCHITECT
1700 BROADWAY, NEW YORK 10001

CONTRACTOR :

DRAWING TITLE : CUSTOM MILLWORK SHELVING SECTIONS

ROOM OR SPACE : FLOOR : 12th

PROJECT NUMBER: 083-21

DRAWING NUMBER: 3-03

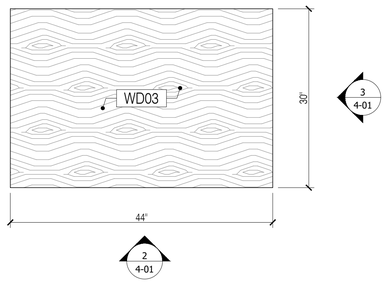

1 MODEL DISPLAY STAND - PLAN VIEW
Scale: 1"=1'-0"

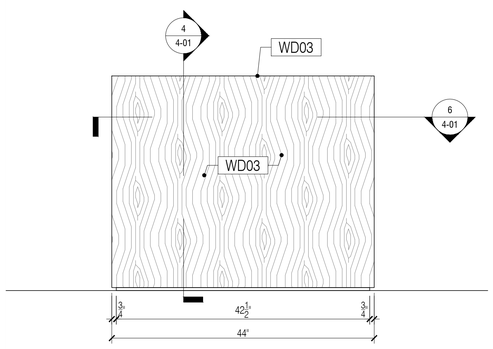

2 MODEL DISPLAY STAND - ELEVATION
Scale: 1"=1'-0"

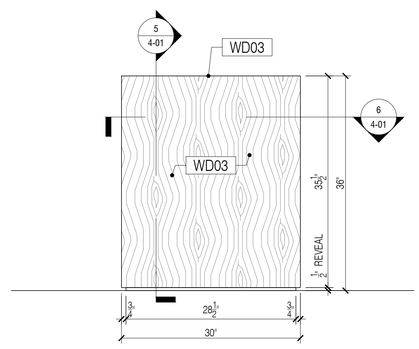

3 MODEL DISPLAY STAND - ELEVATION
Scale: 1"=1'-0"

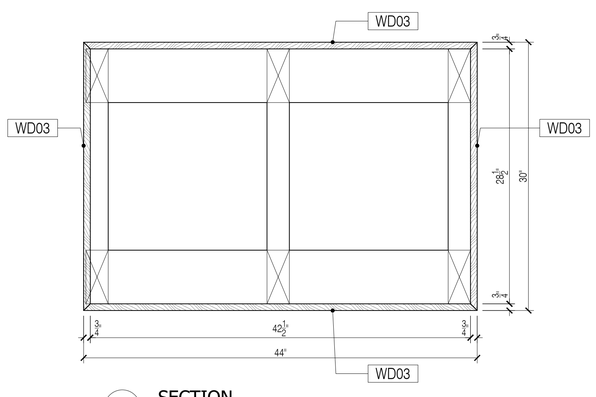

4 SECTION
Scale: 1-1/2"=1'-0"

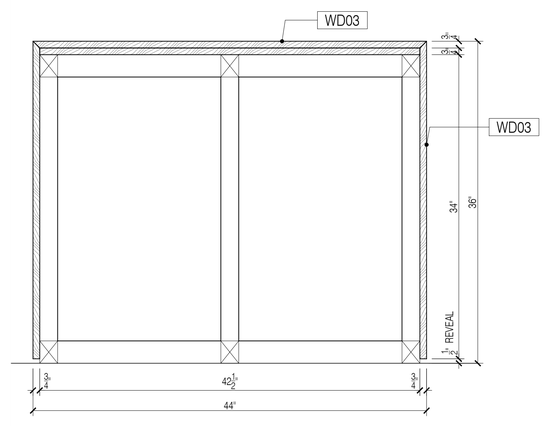

4 SECTION
Scale: 1-1/2"=1'-0"

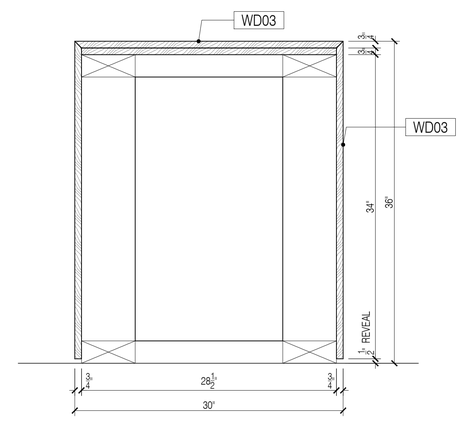

5 SECTION
Scale: 1-1/2"=1'-0"

GENERAL NOTES

1. SEE ARCHITECTURAL DWG FOR FINISH SCHEDULE
2. ALL DIMENSIONS ARE VERIFY IN THE FIELD

- GC TO COORDINATE EXACT LOCATION OF OUTLET WITH MILLWORK
- GC TO PROVIDE ALL NECESSARY BLOCKING AS REQUIRED

QUANTITY

ITEM #	FLOOR	DESCRIPTION	QTY	SUB TOTAL
1.	12th.	MODEL DISPLAY STAND 1204	1 EA.	
TOTAL			1 EA.	

REFERENCE DWG :

1. A-212
2. ISSUED FOR CONSTRUCTION 03.09.21

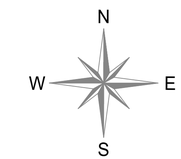

NO:	REVISIONS:	NAME:	DATE:
1	SUBMISSION FOR APPROVAL	N.P.	05/28/2021
2	REVISED AS PER COMMENTS	N.P.	06/18/2021

SAMPLE PROJECT

Finepoint
Accelerating Excellence

DATE : 05/28/2021

DRAWN BY : N.P.

ARCHITECT :
GENSLER ARCHITECT
1700 BROADWAY, NEW YORK 10001

CONTRACTOR :

DRAWING TITLE :
MODEL DISPLAY STAND
PLAN, ELEVATION, SECTION

ROOM OR SPACE : 1204
FLOOR : 12th

PROJECT NUMBER: 083-21

DRAWING NUMBER: 4-01

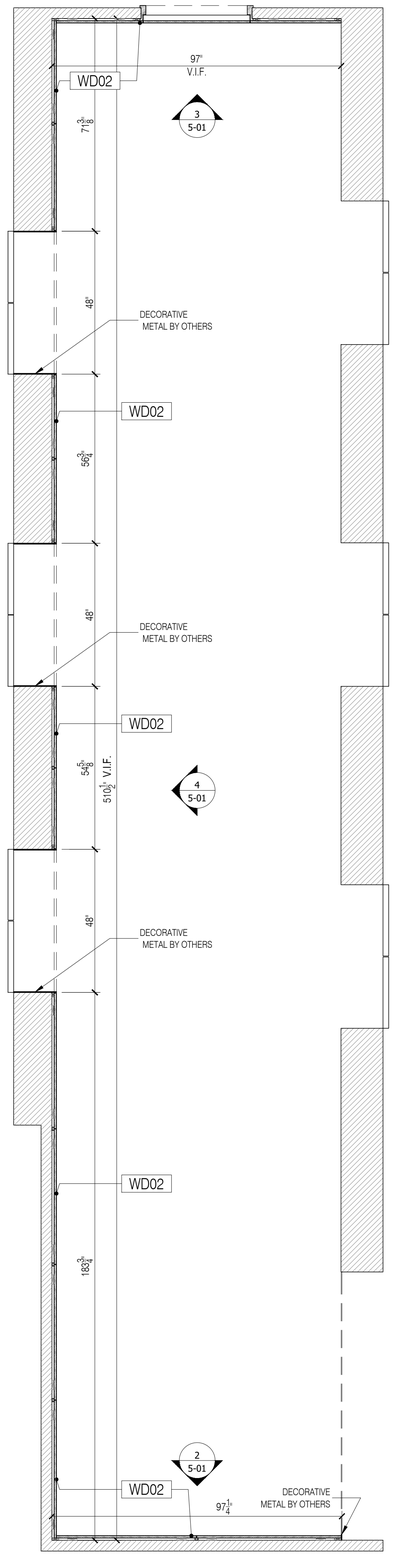

1 ELEVATOR LOOBBY 1201 - PLAN VIEW

Scale: 1/2"=1'-0"

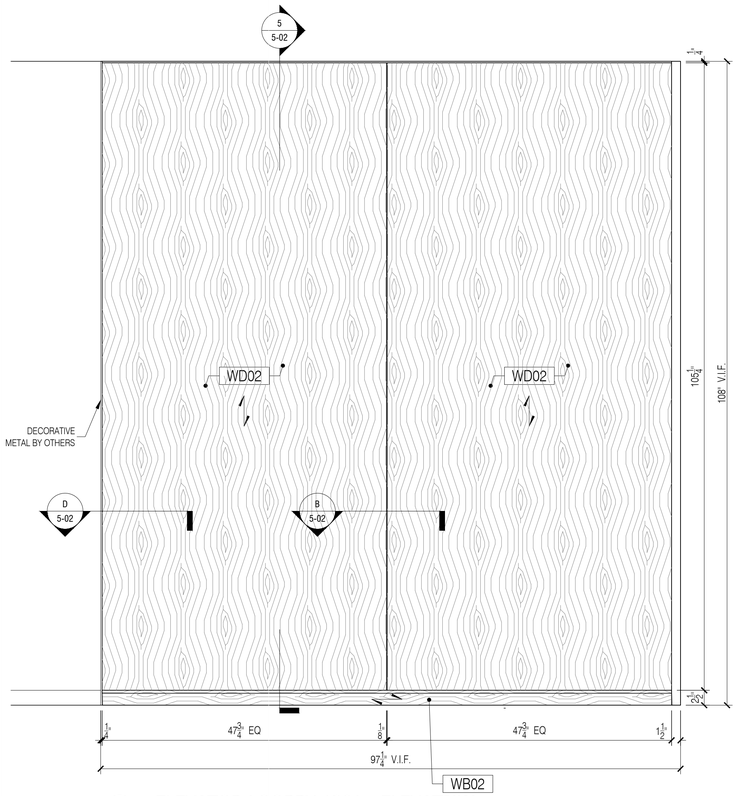

2 ELEVATOR LOOBBY 1201 - ELEVATION

Scale: 1"=1'-0"

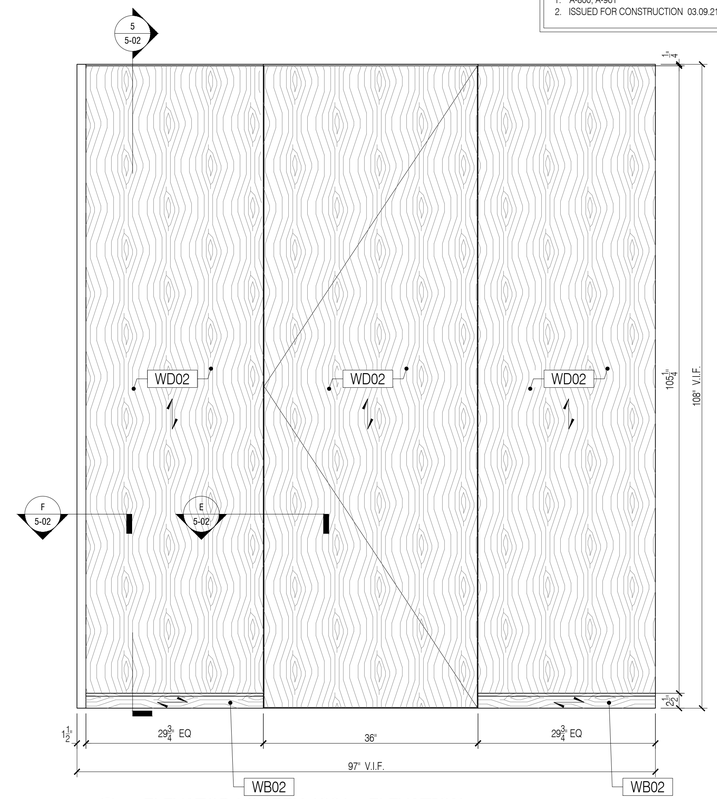

3 ELEVATOR LOOBBY 1201 - ELEVATION

Scale: 1"=1'-0"

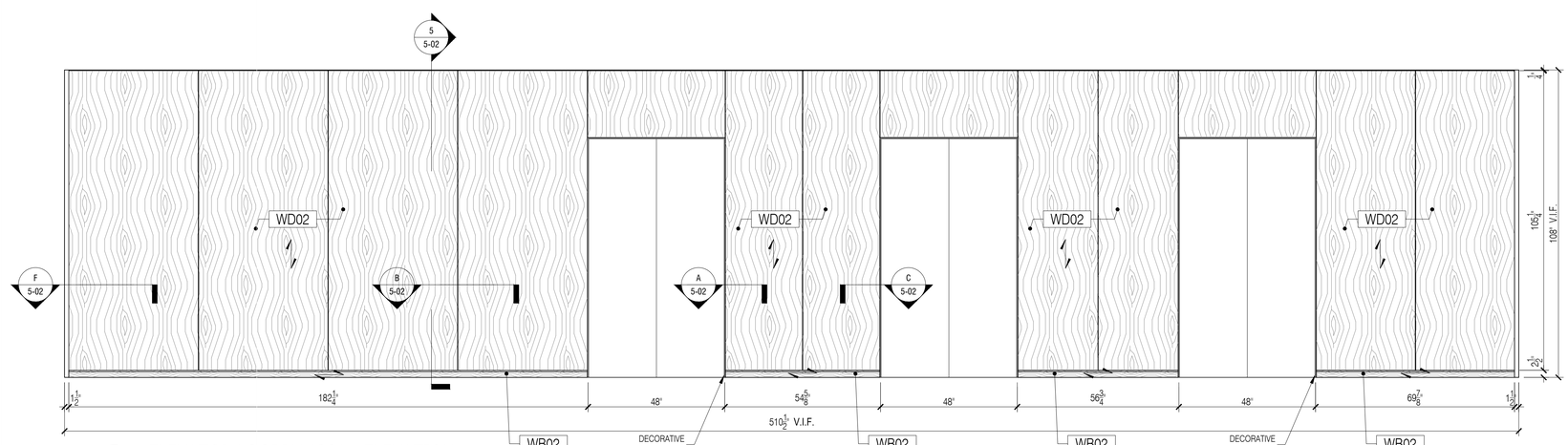

4 ELEVATOR LOOBBY 1201 - ELEVATION

Scale: 1/2"=1'-0"

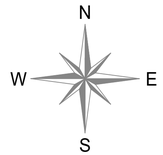

GENERAL NOTES

1. SEE ARCHITECTURAL DWG FOR FINISH SCHEDULE
2. ALL DIMENSIONS ARE VERIFY IN THE FIELD

- GC TO COORDINATE EXACT LOCATION OF OUTLET WITH MILLWORK
- GC TO PROVIDE ALL NECESSARY BLOCKING AS REQUIRED

QUANTITY

ITEM #	FLOOR	DESCRIPTION	QTY	SUB TOTAL
1.	12th.	ELEVATOR LOBBY 1201	1 EA.	
TOTAL			1 EA.	

REFERENCE DWG :

1. A-800, A-961
2. ISSUED FOR CONSTRUCTION 03.09.21

NO:	REVISIONS:	NAME:	DATE:
1	SUBMISSION FOR APPROVAL	N.P.	05/28/2021
2	REVISED AS PER COMMENTS	N.P.	06/18/2021

SAMPLE PROJECT

Finepoint
Accelerating Excellence

DATE : 05/28/2021

DRAWN BY : N.P.

ARCHITECT :
GENSLER ARCHITECT
1700 BROADWAY, NEW YORK 10001

CONTRACTOR :

DRAWING TITLE :
ELEVATOR LOBBY PLAN, ELEVATIONS

ROOM OR SPACE : 1201
FLOOR : 12th

PROJECT NUMBER: 083-21

DRAWING NUMBER: 5-01

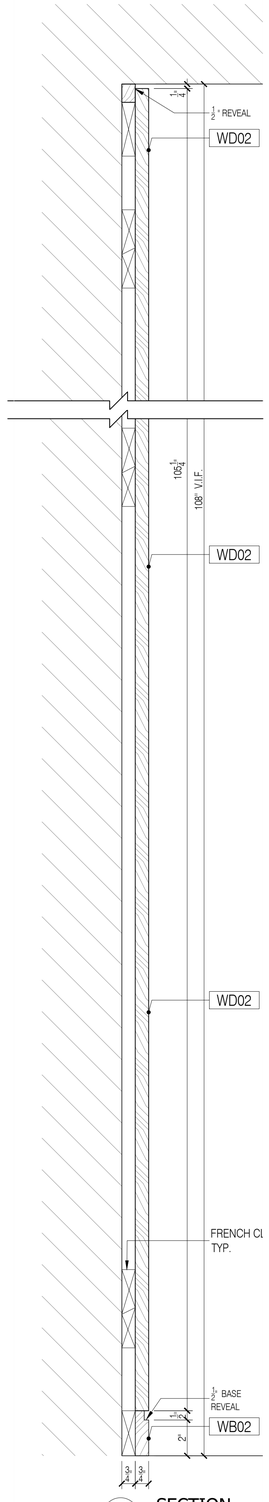

5 SECTION
Scale: 3"=1'-0"

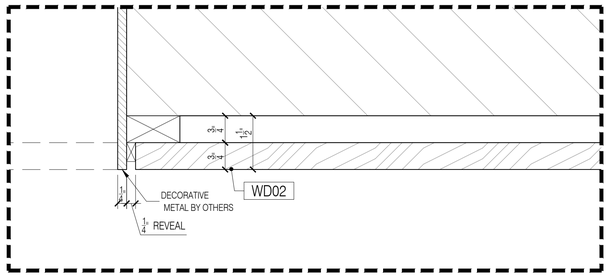

A DETAIL
Scale: 3"=1'-0"

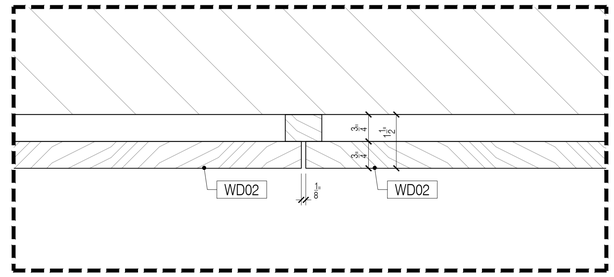

B DETAIL
Scale: 3"=1'-0"

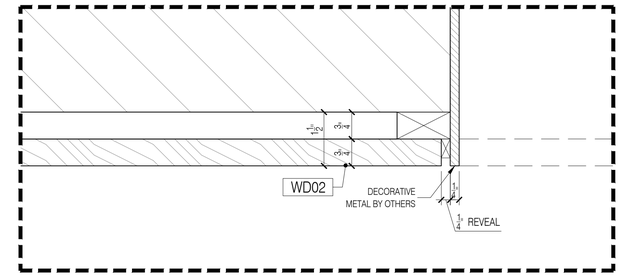

C DETAIL
Scale: 3"=1'-0"

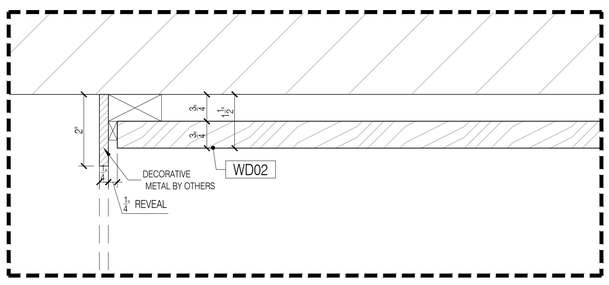

D DETAIL
Scale: 3"=1'-0"

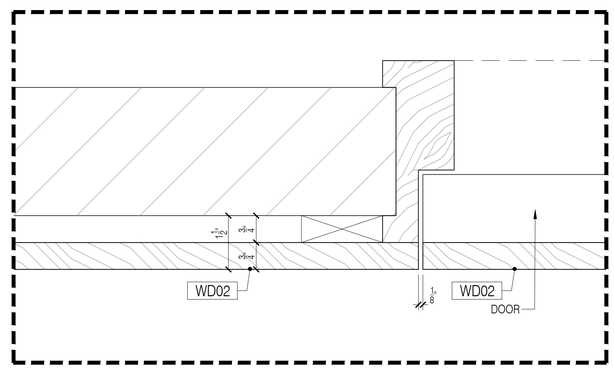

E DETAIL
Scale: 3"=1'-0"

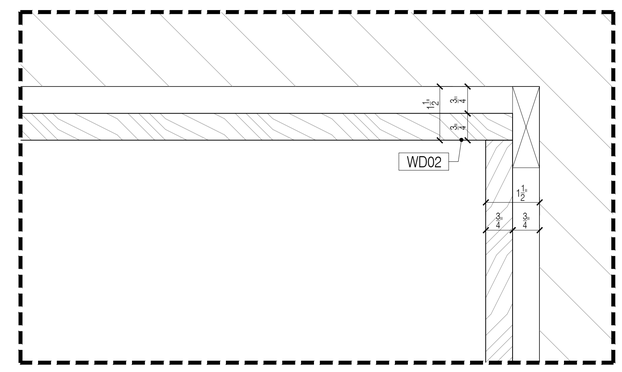

F DETAIL
Scale: 3"=1'-0"

GENERAL NOTES

1. SEE ARCHITECTURAL DWG FOR FINISH SCHEDULE
2. ALL DIMENSIONS ARE VERIFY IN THE FIELD

- GC TO COORDINATE EXACT LOCATION OF OUTLET WITH MILLWORK
- GC TO PROVIDE ALL NECESSARY BLOCKING AS REQUIRED

QUANTITY

ITEM #	FLOOR	DESCRIPTION	QTY	SUB TOTAL
1.	12th.	ELEVATOR LOBBY 1201	1 EA.	
TOTAL			1 EA.	

REFERENCE DWG :

1. A-800, A-961
2. ISSUED FOR CONSTRUCTION 03.09.21

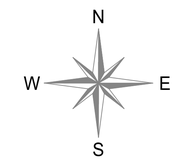

NO:	REVISIONS:	NAME:	DATE:
1	SUBMISSION FOR APPROVAL	N.P.	05/28/2021
2	REVISED AS PER COMMENTS	N.P.	06/18/2021

SAMPLE PROJECT

Fingerpoint
Accelerating Excellence

DATE : 05/28/2021

DRAWN BY : N.P.

ARCHITECT :
GENSLER ARCHITECT
1700 BROADWAY, NEW YORK 10001

CONTRACTOR :

DRAWING TITLE :
ELEVATOR LOBBY SECTIONS, DETAILS

ROOM OR SPACE : 1201
FLOOR : 12th

PROJECT NUMBER: 083-21

DRAWING NUMBER: 5-02

2 OF 2

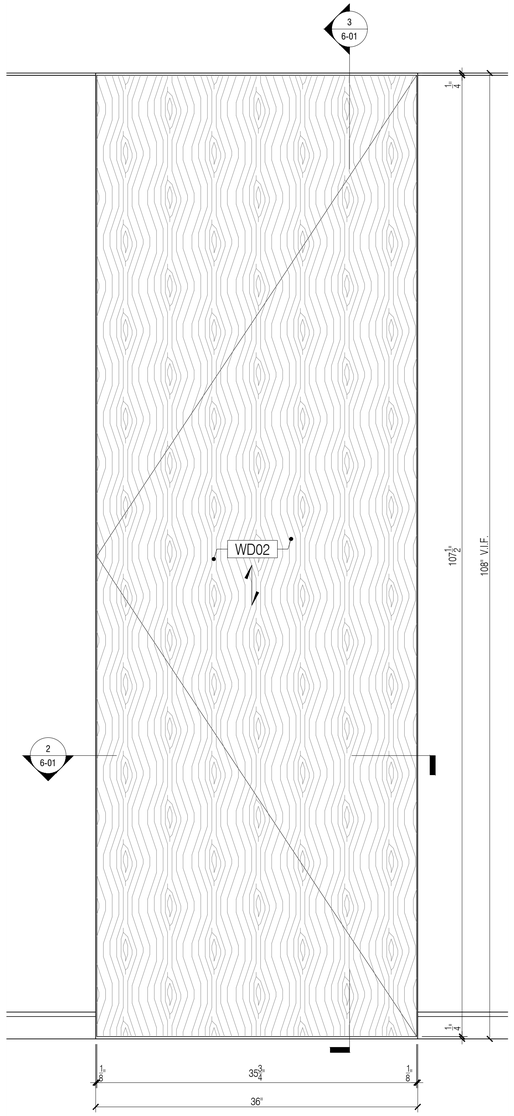

1 WOOD DOOR TYPE F - ELEVATION
Scale: 1-1/2"=1'-0"

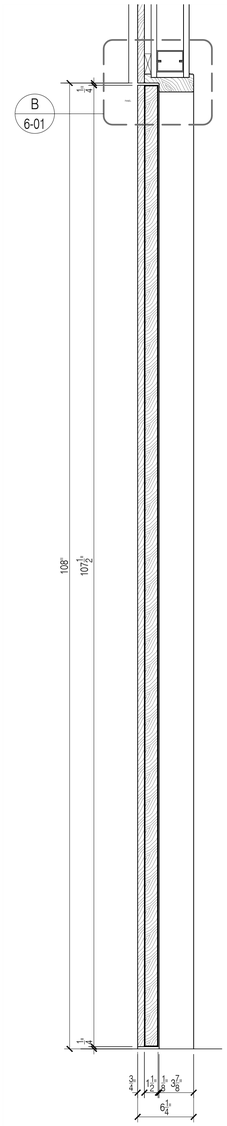

3 SECTION
Scale: 1-1/2"=1'-0"

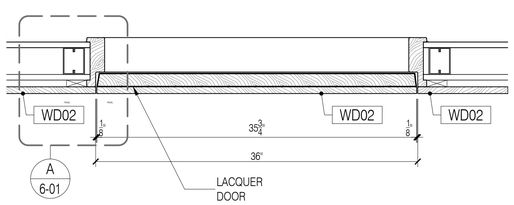

2 WOOD DOOR TYPE F - SECTION
Scale: 1-1/2"=1'-0"

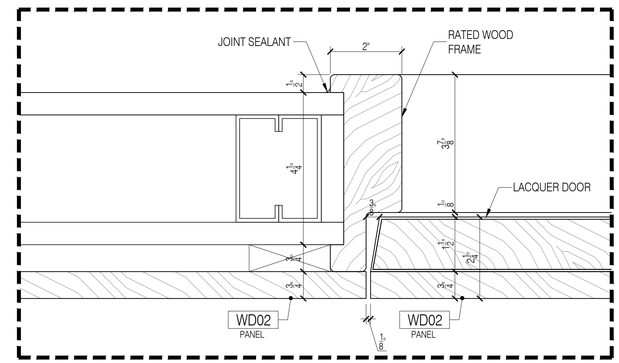

A DETAIL
Scale: 3"=1'-0"

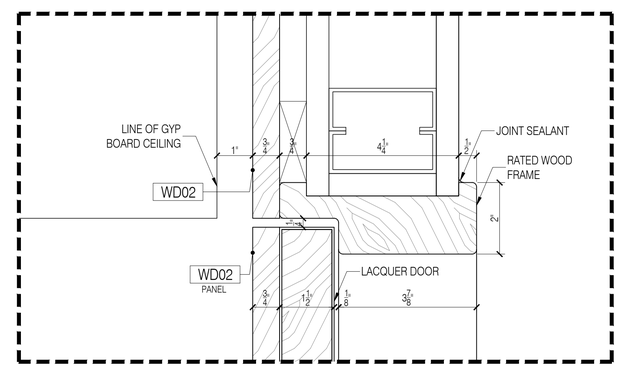

B DETAIL
Scale: 3"=1'-0"

GENERAL NOTES

1. SEE ARCHITECTURAL DWG FOR FINISH SCHEDULE
2. ALL DIMENSIONS ARE VERIFY IN THE FIELD

- GC TO COORDINATE EXACT LOCATION OF OUTLET WITH MILLWORK
- GC TO PROVIDE ALL NECESSARY BLOCKING AS REQUIRED

QUANTITY

ITEM #	FLOOR	DESCRIPTION	QTY	SUB TOTAL
1.	12th.	WOOD DOORS TYPE F 1201	1 EA.	
TOTAL			1 EA.	

REFERENCE DWG :

1. A-941
2. ISSUED FOR CONSTRUCTION 03.09.21

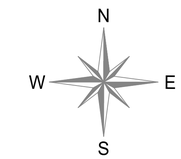

NO:	REVISIONS:	NAME:	DATE:
1	SUBMISSION FOR APPROVAL	N.P.	05/28/2021
2	REVISED AS PER COMMENTS	N.P.	06/18/2021

SAMPLE PROJECT

Fingerprint
Accelerating Excellence

DATE : 05/28/2021

DRAWN BY : N.P.

ARCHITECT :
GENSLER ARCHITECT
1700 BROADWAY, NEW YORK 10001

CONTRACTOR :

DRAWING TITLE :
WOOD DOORS
PLAN, ELEVATION, SECTION

ROOM OR SPACE : 1201
FLOOR : 12th

PROJECT NUMBER: 083-21

DRAWING NUMBER: 6-01

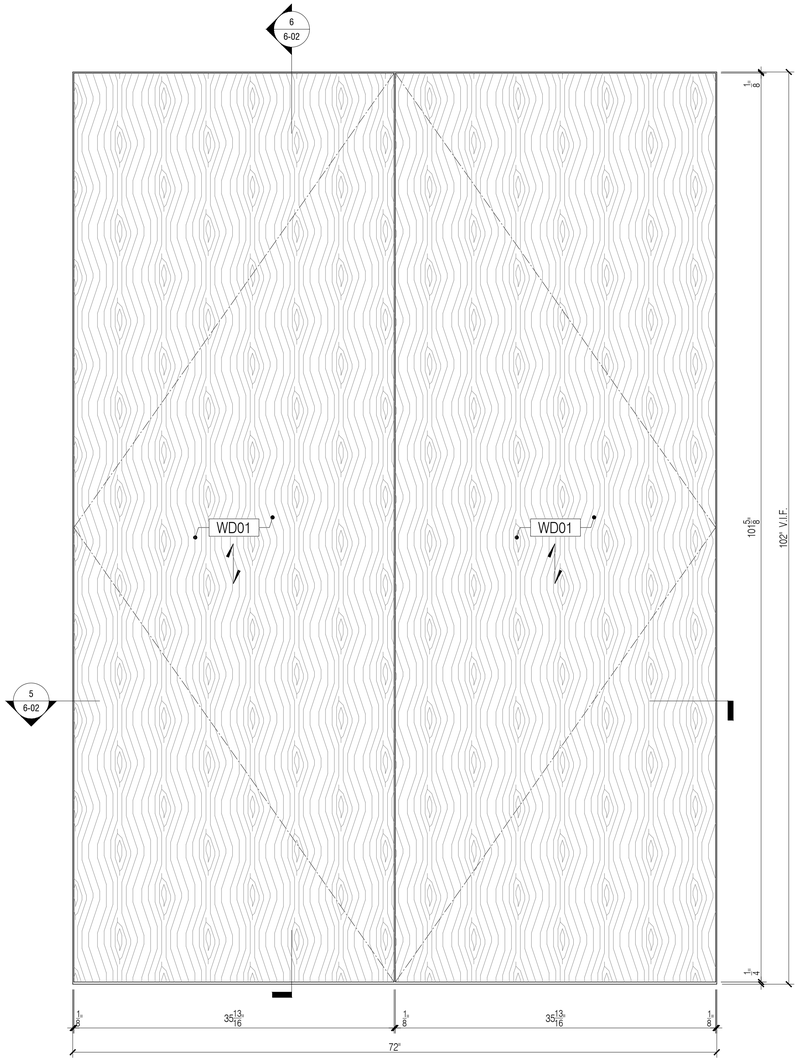

4 WOOD DOOR TYPE F/F - ELEVATION
Scale: 1-1/2"=1'-0"

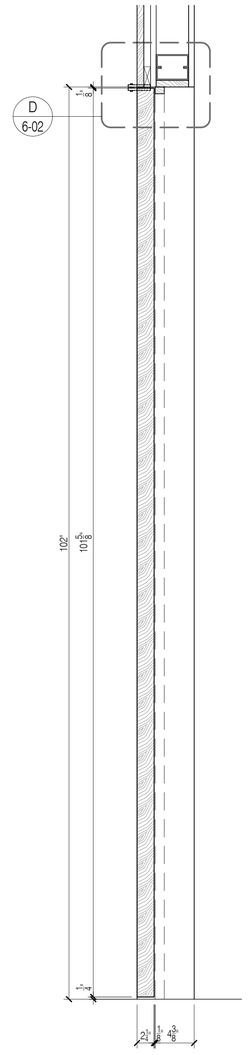

6 SECTION
Scale: 1-1/2"=1'-0"

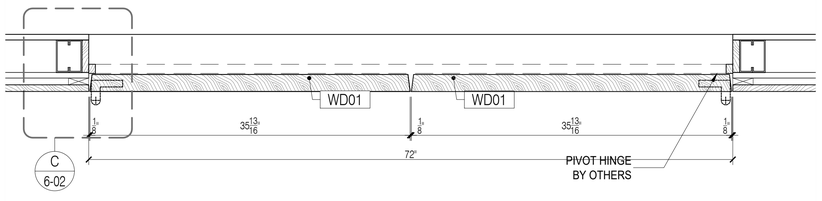

5 WOOD DOOR TYPE F/F - SECTION
Scale: 1-1/2"=1'-0"

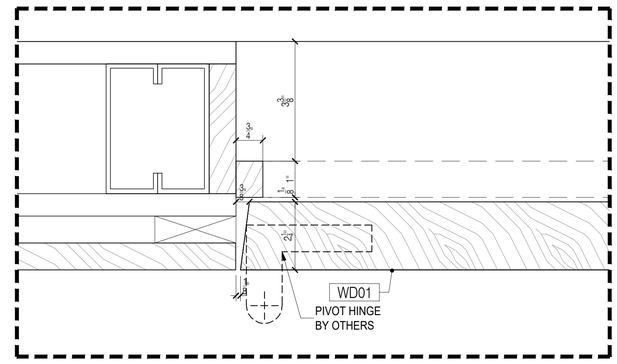

A DETAIL
Scale: 3"=1'-0"

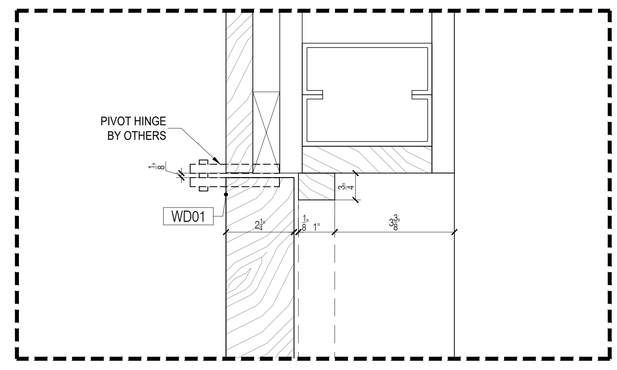

B DETAIL
Scale: 3"=1'-0"

GENERAL NOTES

1. SEE ARCHITECTURAL DWG FOR FINISH SCHEDULE
2. ALL DIMENSIONS ARE VERIFY IN THE FIELD

- GC TO COORDINATE EXACT LOCATION OF OUTLET WITH MILLWORK
- GC TO PROVIDE ALL NECESSARY BLOCKING AS REQUIRED

QUANTITY

ITEM #	FLOOR	DESCRIPTION	QTY	SUB TOTAL
1.	12th.	WOOD DOORS TYPE F/F	4 EA.	
TOTAL			4 EA.	

REFERENCE DWG :

1. A-941
2. ISSUED FOR CONSTRUCTION 03.09.21

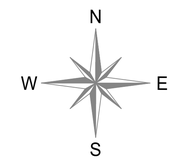

NO:	REVISIONS:	NAME:	DATE:
1	SUBMISSION FOR APPROVAL	N.P.	05/28/2021
2	REVISED AS PER COMMENTS	N.P.	06/18/2021

SAMPLE PROJECT

Fingerprint
Accelerating Excellence

DATE : 05/28/2021

DRAWN BY : N.P.

ARCHITECT : GENSLER ARCHITECT
1700 BROADWAY, NEW YORK 10001

CONTRACTOR :

DRAWING TITLE : WOOD DOORS PLAN, ELEVATION, SECTION

ROOM OR SPACE : 1207

FLOOR : 12th

PROJECT NUMBER: 083-21

DRAWING NUMBER: 6-02

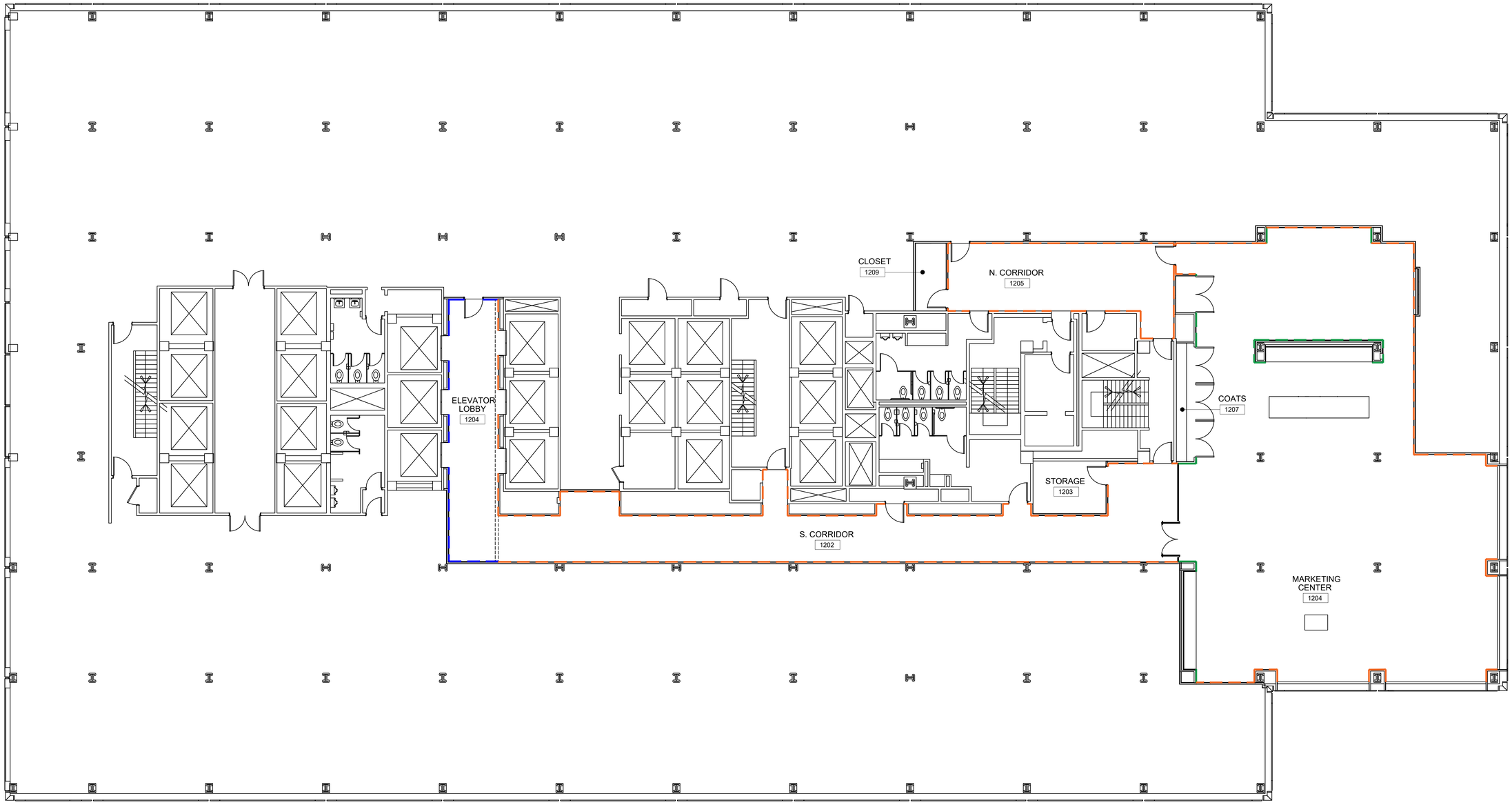

1 BASE PLAN
Scale: 1/8"=1'-0"

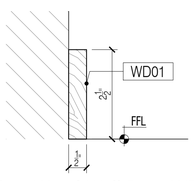

A Wood Wall Base WB01
Scale: 6"=1'-0"

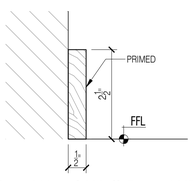

B Wood Wall Base WB02
Scale: 6"=1'-0"

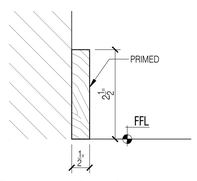

B Wood Wall Base WB03
Scale: 6"=1'-0"

LEGEND

WB01	-	2.5' WD-01 WOOD BASE
WB02	-	2.5' PRIMED WOOD BASE
WB03	-	2.5' PRIMED WOOD BASE

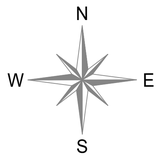

NO:	REVISIONS:	NAME:	DATE:
1	SUBMISSION FOR APPROVAL	N.P.	05/28/2021
2	REVISED AS PER COMMENTS	N.P.	06/18/2021

SAMPLE PROJECT

Finepoint
Accelerating Excellence

DATE : 05/28/2021

DRAWN BY : N.P.

ARCHITECT :
GENSLER ARCHITECT
1700 BROADWAY, NEW YORK 10001

CONTRACTOR :

DRAWING TITLE :
BASE PLAN

ROOM OR SPACE :

FLOOR : 12th

PROJECT NUMBER: 083-21

DRAWING NUMBER: 7-01

1 OF 1

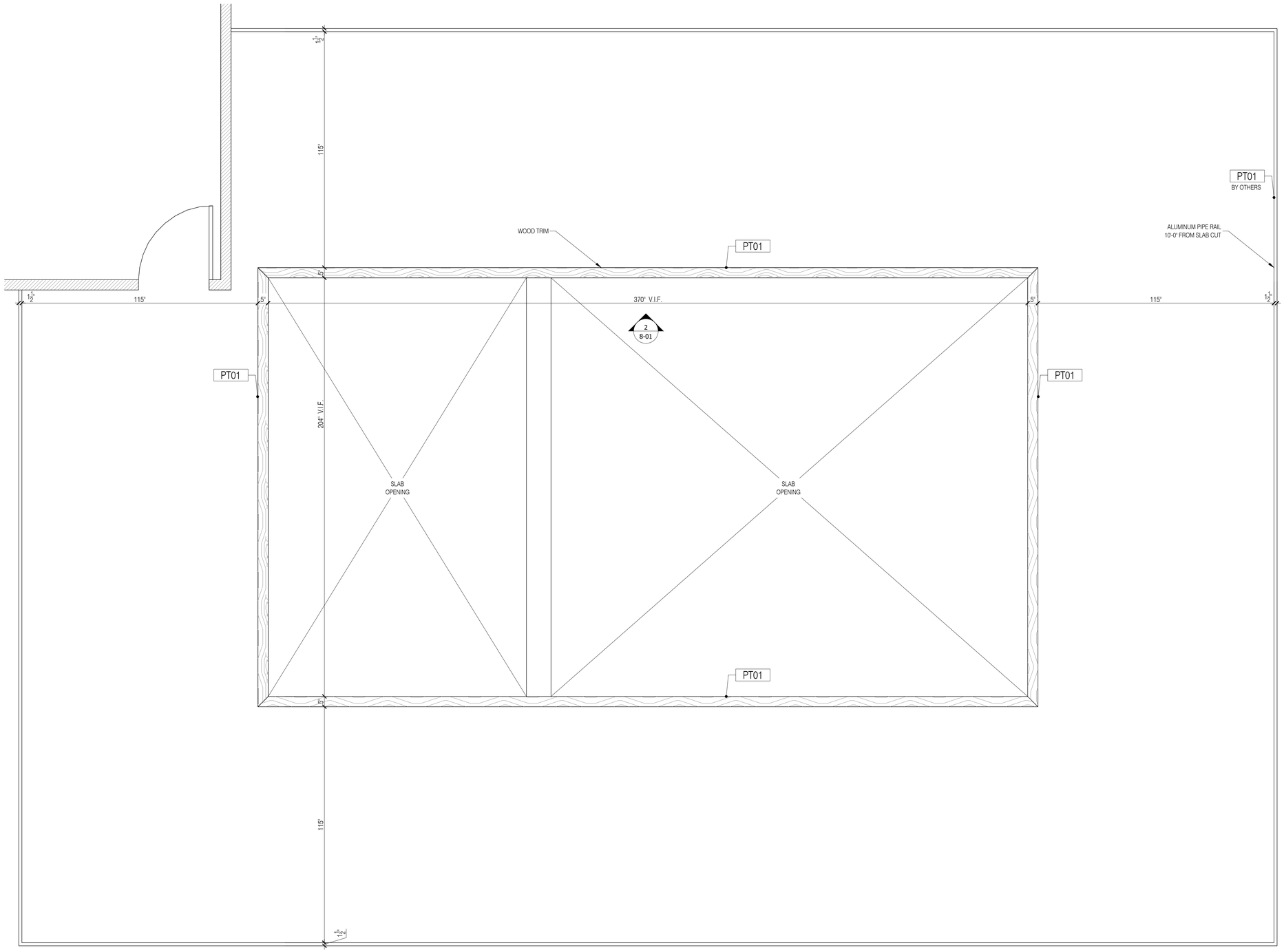

1 SLAB OPENING - PLAN VIEW
Scale: 1/2"=1'-0"

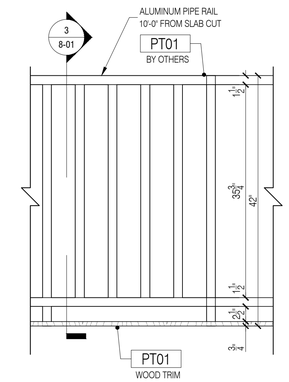

2 SLAB OPENING - ELEVATION TYP
Scale: 1"=1'-0"

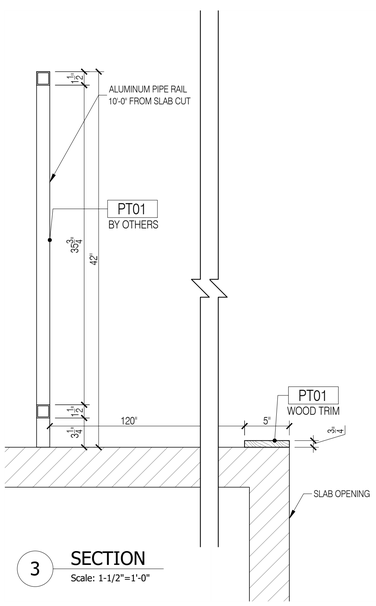

3 SECTION
Scale: 1-1/2"=1'-0"

GENERAL NOTES

1. SEE ARCHITECTURAL DWG FOR FINISH SCHEDULE
2. ALL DIMENSIONS ARE VERIFY IN THE FIELD

- GC TO COORDINATE EXACT LOCATION OF OUTLET WITH MILLWORK
- GC TO PROVIDE ALL NECESSARY BLOCKING AS REQUIRED

QUANTITY

ITEM #	FLOOR	DESCRIPTION	QTY	SUB TOTAL
1.	13th.	WOOD TRIM	1 EA.	
TOTAL			1 EA.	

REFERENCE DWG :

1. A-941
2. ISSUED FOR CONSTRUCTION 03.09.21

N
W E
S

NO:	REVISIONS:	NAME:	DATE:
1	SUBMISSION FOR APPROVAL	N.P.	05/28/2021
2	REVISED AS PER COMMENTS	N.P.	06/18/2021

SAMPLE PROJECT

Fineline
Accelerating Excellence

DATE : 05/28/2021

DRAWN BY : N.P.

ARCHITECT :
GENSLER ARCHITECT
1700 BROADWAY, NEW YORK 10001

CONTRACTOR :

DRAWING TITLE :
WOOD TRIM
PLAN, ELEVATION, SECTION

ROOM OR SPACE : STLB
FLOOR : 13th

PROJECT NUMBER: 083-21

DRAWING NUMBER: 8-01

1 OF 1